amateur radio

JOURNAL OF THE WIRELESS INSTITUTE OF AUSTRALIA

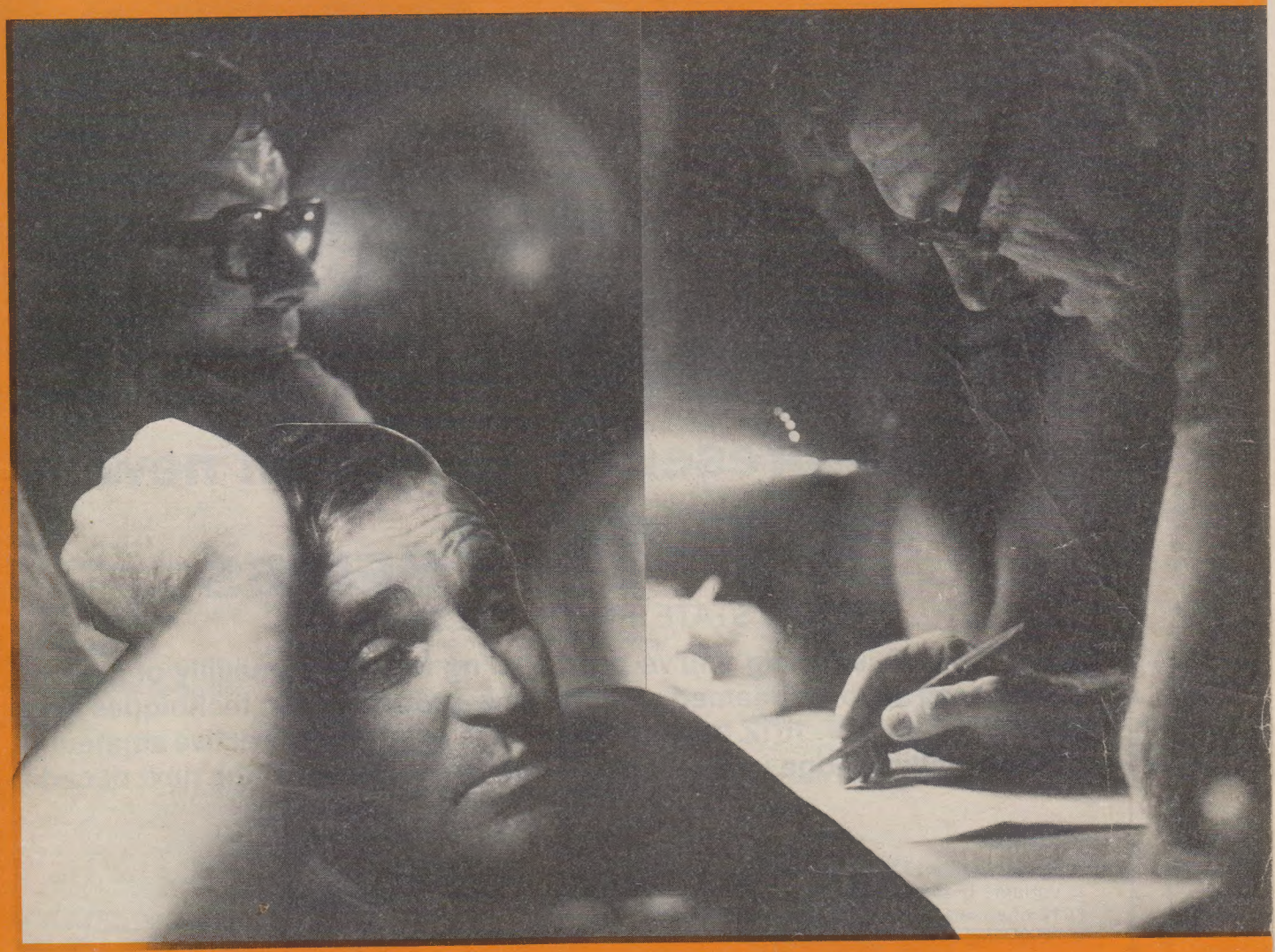

VOL. 48, No. 4 APRIL 1980

FEATURED IN THIS ISSUE:

- ★ THE DJ4LB ATV TRANSMITTER AS A BASIS FOR A 70 cm SSB TRANSVERTER
- ★ A 40 WATT 432 MHz LINEAR AMPLIFIER
- ★ A CURE FOR UNWANTED HIGH LEVEL MIXING WITH THE TS600
- ★ THE SEVERITY OF AN EARTHQUAKE
- ★ VK-ZL CONTEST 1979 RESULTS

Registered for posting as a Publication — Category "B".

set your sights on this . . .

YAESU

The radio.

now presents you the all new

FT-107 SERIES

SOLID STATE HF TRANSCEIVER

The FT-107M is the rig you've been waiting for. The versatility of all solid state construction is teamed with the time-proven design techniques from the FT-901 and FT-101Z transceivers to give you—today's active amateur—the competitive edge under the demanding conditions of the next decade.

Features

- PA protection; 75% rated output at 3:1 SWR
- Variable IF bandwidth
- 12 channels of memory with optional unit
- Scanning microphone option
- Ivory or Grey colour face
- Selectable AGC
- Offset tuning

Specifications

160m–10m plus 2 aux. bands
13.5V DC 20A, 234V AC PSU options

P.S.
You can add –
external VFO,
VHF/UHF/OSCAR
transverter and
antenna coupler . . .

bail

ELECTRONIC SERVICES

STAN ROBERTS VK3BSR

38 Faithful St., WANGARATTA 3677

Telephone: (057) 21 6260 Telex: Teletra AA 56880

Distributors in all states and N.T.

AGENTS & REPS:— W.A. COMO (09) 450 4379; PERTH (09) 321 7609; KALGOORLIE (090) 21 1906; **S.A.** PLYMPTON (08) 293 2155; **TAS.** LAUNCESTON (003) 44 5000; **N.S.W.** MASCOT (02) 667 1650; SEVEN HILLS (02) 624 2691; NEWCASTLE (049) 69 2040; WAGGA WAGGA (069) 21 2125.

COFFS HARBOUR (066) 54 3206; TAMWORTH (067) 66 1363; INVERELL (067) 22 1300; **QLD.** ALBION (07) 57 6830; TOWNSVILLE (077) 79 8179; CAIRNS (070) 51 4826; BRISBANE (07) 48 6601; **N.T.** DARWIN (089) 81 5411;

Published monthly as its official journal by the Wireless Institute of Australia, founded 1910.

amateur radio

APRIL 1980
VOL. 48, No. 4

PRICE: $1.20

Registered Office:
3/105 Hawthorn Road,
Caulfield North 3161.

MANAGING EDITOR:
BRUCE BATHOLS* VK3UV

PRODUCTION MANAGER:
MARK STEPHENSON* VK3NOY

TECHNICAL EDITORS:
BILL RICE* VK3ABP
EVAN JARMAN* VK3ANI
RON COOK* VK3AFW
GIL SONES* VK3AUI

CONTRIBUTING EDITORS:
BOB ARNOLD VK3ZBB
MIKE BAZLEY VK6HD
ROD CHAMPNESS VK3UG
ROY HARTKOPF* VK3AOH
RON FISHER* VK3OM
ERIC JAMIESON VK5LP
PETER MILL VK3ZPP
LEN POYNTER* VK3ZGP
BILL VERRALL VK5WV
WALLY WATKINS VK2DEW

DRAFTING:
NEIL OSBORNE* VK3YEI

BUSINESS MANAGER:
PETER DODD VK3CIF

***Member of Publications Committee**

Enquiries and material to:
The Editor,
PO Box 150, Toorak, Vic. 3142

Copy is required by the **first of each month.** Acknowledgement may not be made unless specially requested. All important items should be sent by certified mail. The editor reserves the right to edit all material, including Letters to the Editor and Hamads, and reserves the right to refuse acceptance of any material, without specifying a reason.

Advertising: Material should be sent direct to **P.O. Box 150, Toorak, Vic., 3142,** by the **25th of the second month preceding publication. Phone: (03) 528 5962.** Hamads should be sent direct to **P.O. Box 150, Toorak, Vic., 3142,** by the **1st of the month preceding publication.**

Trade Practices Act: It is impossible for us to ensure that advertisements submitted for publication comply with the Trade Practices Act 1974. Therefore advertisers and advertising agents will appreciate the absolute need for themselves to ensure that the provisions of the Act are complied with strictly. Readers are reminded that, when buying, obtaining or receiving goods from overseas including goods listed in advertisements by overseas organisations in this Journal, Customs import duties and Sales Tax may be levied on the goods at the time of importation. These amounts, if any, are payable by the purchaser unless the terms of sale state otherwise and the seller has made specific provision to this effect in his quotation to the buyer or unless other prior arrangements are in force between the buyer and the seller.

Typesetting: MUELLER INDUSTRIES
1a Levanswell Road, Moorabbin, 3189
Tel.: 553 0292

Printers: EQUITY PRESS PTY. LTD.
50-52 Islington Street, Collingwood, 3066
Tel.: 41 5054, 41 5055

CONTENTS

TECHNICAL

A Cure for Unwanted High Level Mixing with the TS600 12
A 40 watt 432 MHz Linear Amplifier 8
A Two Element Quad for 28 MHz 10
Modifications to the Weston HF1000 Transceiver 28
NOVICE NOTES—
Peak Envelope Power Measurement 36
The DJ4LB ATV Transmitter as a Basis for a 70 cm SSB Transverter 16

GENERAL

How Much Electrical Current Can Your Heart Tolerate 27
NOVICE NOTES—
In the OM's Footsteps 36
Outback Australia Travellers 36
Observations of a Beginner in Amateur Radio 26
Pick of the Pics from VK6 34
What is Amateur Radio? 13
The Mole 9
The Severity of an Earthquake 32
VK-ZL Contest 1979 Results 44

DEPARTMENTS

Afterthoughts 9
ALARA 42
Awards Column 41
Coming Events 43
Contests 41
Divisional Notes 43
Hamads 46
Intruder Watch 43
Ionospheric Predictions 45
Letters to the Editor 40
Main QSP 5
Magpubs 27, 40, 42
Obituary 5, 46
QSP 31, 33
Silent Keys 46
Spotlight on SWL-ing 33
Stolen Radio Equipment 39
WIANEWS 6
VHF-UHF — an Expanding World 39
You and DX 45

ADVERTISERS' INDEX 46

Cover Photo

A montage, pictured during business proceedings, of a few of those behind the Wide Bay Burnett 2 metre repeater, R44. Shown (left to right) are Bob VK4AZE, Geoff VK4GI, and Rusty VK4JM. The repeater is now operating from Mount Goonanamin, 155 miles north of Brisbane, by the Bundaberg Amateur Radio Club.

Photography: Bob Wright VK4UD

WIRELESS INSTITUTE OF AUSTRALIA

Federal President: Dr. D. A. Wardlaw VK3ADW
Federal Council:
VK1 Mr. R. G. Henderson VK1RH
VK2 Mr. T. I. Mills VK2ZTM
VK3 Mr. G. A. G. Williams VK3ZXW
VK4 Mr. A. R. F. McDonald VK4TE
VK5 Mr. C. J. Hurst VK5HI
VK6 Mr. N. R. Penfold VK6NE
VK7 Mr. R. K. Emmett VK7KK
Staff: Mr. P. B. Dodd VK3CIF, Secretary.
Part-time: Col. C. W. Perry, Mrs. J. M. Seddon and Mr. Mark Stephenson (AR Production).
Executive Office: 3/105 Hawthorn Rd., Caulfield North, Vic. 3161. Ph. (03) 528 5962.
Divisional Information (all broadcasts are on Sundays unless otherwise stated).

ACT:
President — Mr. A. Davis VK1DA
Secretary — Mr. F. Robertson-Mudie VK1NAV
Broadcasts— 3570 kHz and 2m Ch. 6 (or 7): 10.00Z.

NSW:
President — Mr. F. S. Parker VK2NFF
Secretary — Mr. T. I. Mills VK2ZTM
Broadcasts— 1825, 3595, 7146 kHz, 28.32, 52.1, 52.525, 144.1, 145.6, 146.4, Rptr. Ch. 3 — Gosford, Ch. 4 — Lismore, Ch. 5 Wollongong, Ch. 8 — Dural 11.00h local (Evening 0930Z). Relays on 160, 80 and 10m, VHF and Reptr. Ch. 3, Ch. 5, Ch. 8, and Hunter Branch, Mondays 0930Z on 3595 kHz, 10m, and Ch. 3 and 6. RTTY Sunday 0030Z 7045, 14090 kHz, Ch. 52, 0930Z 3545 kHz, Ch. 52.

VIC.:
President — Mr. E. J. Buggee VK3ZZN
Secretary — Mr. G. F. Atkinson VK3YFA
Broadcasts— 1840, 3600, 7135 kHz — 53.032 AM, 144.2 USB and 2m Ch. 2 (5) repeater: 10.30 local time.
Gen. Mtg. — 2nd Wed., 20.00.

QLD.:
President — Mr. A. J. Aarsse VK4QA
Secretary — Mr. W. L. Gielis VK4ABG
Broadcasts— 1825, 3580, 7146, 14342, 21175, 28400, kHz; 2m (Ch. 42, 48): 09.00 EST.
Gen. Mtg. — 3rd Friday.

SA:
President — Mr. I. J. Hunt VK5QX
Secretary — Mr. W. M. Wardrop VK5AWM
Broadcasts— 1820, 3550, 7095, 14175 kHz; 28.5 and 53.1 MHz, 2m (Ch. 8): 09.00 S.A.T.
Gen. Mtg. — 4th Tuesday, 19.30.

WA:
President — Mr. Ross Greenaway VK6DA.
Secretary — Mr. Peter Savage VK6NCP.
Broadcasts— 3560, 7075, 14100, 14175 kHz. 28.47, 53.1 MHz. 2 metres Ch. 2 Perth, Ch. 6 Wagin. Time 0130Z.
Gen. Mtg. — 3rd Tuesday.

TAS.:
President — Mr. I. Nicholls VK7ZZ
Secretary — Mr. P. T. Blake, VK7ZPB
Broadcasts— 7130 (AM) kHz with relays on 2m Ch. 2 (S), Ch. 8 (N), Ch. 3 (NW), 09.30 EST.

NT:
President — Mr. T. A. Hine VK8NTA
Vice-Pres. — Barry Burns VK8DI
Secretary — Robert Milliken VK8NRM
Broadcasts— Relay of VK5WI on 3.555 MHz and on 146.5 MHz at 2330Z. Slow morse transmission by VK8HA on 3.555 MHz at 1000Z almost every day.

Postal Information:
VK1 — P.O. Box 46, Canberra, 2600.
VK2 — 14 Atchison St., Crows Nest, 2065 (Ph. (02) 43 5795 Tues & Thurs (10.00-14.00h). P.O. Box 123, St. Leonards, NSW 2065.
VK3 — 412 Brunswick St., Fitzroy, 3065 (Ph. (03) 41 3535 Weekdays 10.00-15.00h).
VK4 — G.P.O. Box 638, Brisbane, 4001.
VK5 — G.P.O. Box 1234, Adelaide, 5001 — HQ at West Thebarton Rd., Thebarton.
VK6 — G.P.O. Box N1002, Perth, 6001.
VK7 — P.O. Box 1010, Launceston, 7250.
VK8 — (incl. with VK5), Darwin AR Club, P.O. Box 37317, Winnellie, N.T., 5789.

Slow morse transmissions — most week-day evenings about 09.30Z onwards around 3550 kHz.

VK QSL BUREAUX

The following is the official list of VK QSL Bureaux, all are inwards and outwards unless otherwise stated.

VK1 — QSL Officer, G.P.O. Box 46, Canberra, A.C.T. 2600.
VK2 — QSL Bureau, C/- Hunter Branch, P.O. Teralba, N.S.W. 2284.
VK3 — Inwards QSL Bureau, Mr. E. Trebilcock, 340 Gillies Street, Thornbury, Vic. 3071.
VK3 — Outwards QSL Bureau, Mr. R. R. Prowse, 83 Brewer Road, Bentleigh, Vic. 3204.
VK4 — QSL Officer, G.P.O. Box 638, Brisbane, Qld., 4001.
VK5 — QSL Bureau, Mr. Ray Dobson VK5DI, 16 Howden Road, Fulham, S.A. 5024.
VK6 — QSL Bureau, Mr. J. Rumble VK6RU, G.P.O. Box F319, Perth, W.A. 6001.
VK7 — QSL Bureau, G.P.O. Box 371D, Hobart, Tas. 7001.
VK8 — QSL Bureau, C/- VK8HA, P.O. Box 1418, Darwin, N.T. 5794.
VK9, 0 — Federal QSL Bureau, Mr. N. R. Penfold VK6NE, 388 Huntriss Rd., Woodlands, W.A. 6018.

WIA (FEDERAL) DIRECTORY

MEMBERS OF EXECUTIVE
Dr. D. A. Wardlaw VK3ADW, Federal President.
Mr. P. A. Wolfenden VK3ZPA, Exec. Vice-Chairman.
Mr. K. C. Seddon VK3ACS, Member.
Mr. H. L. Hepburn VK3AFQ, Member.
Lt.-Col. J. McL. Bennett VK3ZA, Member.
Mr. C. D. H. Scott VK3BNG, Hon. Treas.
Secretary: Peter B. Dodd VK3CIF.
Amateur Radio: Mark Stephenson VK3NOY

IARU LIAISON OFFICER AND IMMEDIATE PAST FEDERAL PRESIDENT
Mr. M. J. Owen VK3KI.

INTRUDER WATCH CO-ORDINATOR
Mr. G. J. Fuller VK3NXI

FEDERAL REPEATER SUB-COMMITTEE
Mr. K. C. Seddon VK3ACS, Chairman.
Mr. J. J. L. Martin VK3ZJC.
Mr. P. B. Mill VK3ZPP.

MANAGING EDITOR AND CHAIRMAN OF PUBLICATIONS COMMITTEE
Mr. B. Bathols VK3UV.

FEDERAL BROADCAST TAPE CO-ORDINATORS:
Mr. R. Fisher VK3OM.
Mr. W. Roper VK3ARZ.

FEDERAL EDUCATION CO-ORDINATOR
Mr. G. F. Scott VK3ZR.

FEDERAL HISTORIAN
Mr. G. M. Hull VK3ZS.

FEDERAL CONTESTS MANAGER
Mr. W. A. Watkins VK2DEW

FEDERAL AWARDS MANAGER
Mr. W. D. Verrall VK5WV.

FEDERAL VHF/UHF ADVISORY COMMITTEE
Mr. K. G. Malcolm VK3ZYK, Chairman.
Mr. P. A. Wolfenden VK3ZPA.
Mr. I. W. Cowan VK3BGH.
Mr. L. Janes, VK3BKF.
Mr. J. J. L. Martin VK3ZJC.
Mr. K. L. Phillips VK3AUQ.
Mr. W. M. Rice VK3ABP.

FEDERAL RTTY COMMITTEE
Mr. H. P. Mulligan VK2ABH, Chairman.
Mr. J. J. Lupton VK2BVJ.
Mr. R. E. Taylor VK2AOE.

PROJECT ASERT COMMITTEE
Mr. R. C. Arnold VK3ZBB, Chairman.
Mr. P. A. Wolfenden, VK3ZPA/NIB.
Mr. K. G. McCracken VK2CAX.
Mr. L. Janes VK3BKF.
Mr. G. C. Brown VK3YGB.

AMATEUR SATELLITES
Mr. R. C. Arnold VK3ZBB.

FEDERAL WICEN CO-ORDINATOR
Mr. R. G. Henderson VK1RH.

VK/ZL/O CONTEST MANAGER (VK)
Mr. N. R. Penfold VK6NE.

FEDERAL VIDEOTAPE CO-ORDINATOR
Mr. J. F. Ingham VK5KG.

FEDERAL COUNCILLORS
Please see main Directory.

ALTERNATE FEDERAL COUNCILLORS
VK1 — Mr. A. Davis VK1DA.
VK2 — Mr. P. B. Card VK2ZBX.
VK3 — Mr. A. R. Noble VK3BBM.
VK4 — Mr. D. T. Laurie VK4DT.
VK5 — Mr. G. Preston VK5PI.
Mr. W. M. H. Wardrop VK5AWM.
VK6 — Mr. P. J. Savage VK6NCP.
Mr. B. Hedland-Thomas VK6OO.
VK7 — Mr. P. D. Frith VK7PF.

QSP

STOLEN EQUIPMENT

A note in March 1980 QTC Bulletin (VK4) deserves a universal reminder. It reads "Is your equipment covered by insurance? Have you the serial numbers of all your equipment — is your shack secure? Recently there have been a number of robberies of amateur equipment. Beware of buying equipment with defaced or missing serial numbers. It may belong to one of your friends. Find out as much about the seller as you can, and contact the police."

Another suggestion, do not say, on over-the-air contacts, when and for how long you will be away from home — others listen in on your QSOs, especially on the repeater. ■

EPOXY EYE DAMAGE

A hint to those who use epoxy resins, and I use several varieties for bedding rifles — take great care with liquid hardeners, if any gets in the eyes you have just 5 seconds to get it out with water. The damage is irreversible, even the fumes are toxic and irritant.—Jim VK2BBO in the Lyrebird. ■

RFI

"Work by the RSGB Propagation Studies Committee has shown that many (possibly all) of the curious sweeper and creeper signals on about 27 MHz that we reported in TT in January 1978 appear, after all, to be "man made" and could come from the spurious emissions of industrial RF devices (although not all those who have investigated sweepers accept this view, and the professional research papers in which the phenomena were first reported have apparently never been challenged). But if they are man made then their source is often located many thousands of miles away from the receiver."—TT in Radio Communication, January 1980. ■

QSP OUTLOOK FOR THE FUTURE

Naturally, of course, we are very disappointed that the Government has apparently bowed to pressure and will introduce "Ethnic TV" on the vacated channel 0 frequency, rather than commencing on UHF as originally stated.

We have communicated our concern to the Government in the strongest terms.

It is to be hoped that all concerned members have also expressed their views to their Members of Parliament.

However, while this is a very important issue which required immediate concerted action, we must not be completely distracted by any one issue from the many others which also affect us presently or may affect us in the future from both an operational and organisational point of view.

As we go into a new decade, and with WARC 79 behind us, the Institute must gear itself for the future. How may it best serve the interests of Radio Amateurs:

1. In providing for the needs of its members,
2. In assisting the potential amateur to obtain his goal,
3. In its interface with the licensing authority and Government, and
4. In its relationship with the Amateurs outside Australia through the IARU.

All these facets are important, all can be subdivided and there is a complex relationship between them all.

The Federal Council Meeting at the Annual Federal Convention consider all these things in determining the Institute's current policies.

As you all know, the Federal Council meets this month. I sincerely hope all those with a view on any of the numerous agenda items have expressed this at the Divisional level (grass roots) in order that the Federal Councillor is aware of the majority view of his Division. This is the very important first stage in decision-making by the Institute not to be neglected.

Once a decision has been made after reasonable debate, the best interest of the Institute is served by us all working to a common cause; however, this should not mean an issue cannot be re-opened later if circumstances change.

DAVID WARDLAW VK3ADW
Federal President ■

OBITUARY KEITH ROGET VK3YQ/YJ8KR

Those who knew him were deeply shocked to learn of the sudden death on February 13th of Keith Roget VK3YQ/YJ8KR in Port Vila, New Hebrides, where he had been living for the past sixteen months as manager of Normans Overseas Ltd.

Keith was first licensed in the early fifties, having served during the Second World War as a navigator wireless operator with the RAAF. He saw service in the Mediterranean area, having done his basic training in Kenya.

A staunch supporter of the WIA, Keith became Treasurer of the Victorian Division in 1960 — a position he held for a number of years. He also held the Office of President of the Division and on another occasion was Secretary.

Keith's expertise as an accountant was freely made available to the Institute. He was a leader in the formation of Amateur Radio Ltd.

During his time on the Victorian Divisional Council he was particularly aware of the importance of the country members. He attended many a Zone Convention.

He was one of the instigators of the Victorian National Parks Award. As a keen portable operator he participated in many National Field Days and WICEN exercises.

Keith's business also took him to the Solomon Islands where he was active on the air as VR4AV/H44AV.

Keith joined the Executive in 1973 to act as Treasurer, but even prior to this, as representative of the Victorian Division, he had been very much involved in the formation of the new Federal Company and was also deeply involved in the planning for and employment of a full time Secretary Manager for the Federal Body.

Keith was Federal Treasurer of the Institute up until the time of his departure for overseas.

This was a critical period in the history of the Institute with the expansion of the Federal responsibilities of the Institute, the introduction of the EDP system and very serious monetary inflation. Under Keith's guidance, we were able to ride out an extremely rough storm.

Keith worked in such an unassuming manner that much of his effort went without notice by the general membership. However, if it was not for Keith's contribution, many of the successes of the Institute would not have been so easily gained.

In Keith's death the Institute has lost one of its most untiring workers who well deserved the Honorary Life Membership accorded to him last year.

To his wife Jean and children Judy and David we extend our deepest sympathy.

VK3ADW

WIANEWS

JOINT COMMITTEE

The meeting of the Joint P. and T./WIA Committee was held on 20th February after a lapse of six months caused by concentration on WARC 79 on both sides.

Final proofing of the new Handbook nears completion, it was stated. This related to editorial proofing only. It was hoped that the new edition would be printed and distributed some time in April, depending on other work ahead of it in the Government Printer's Department. The May examination would be based on the old Handbook, the August exam would be set in such a manner that either applied and the November exam would be based on the new Handbook. These proposals depended upon the delays in printing the new. Pressures for more frequent examinations could not be met owing to staff shortages, and, it is suspected, costs involved.

The Department categorically refused to make copies available of the actual examination papers. Instead, they recommended reference material for candidates to study, particularly the 500 questions and answers book for AOCP candidates, published by the WIA NSW Education Service (as reviewed in AR for Nov. 1979, p.45). The Departmental problem is understood to relate to staffing difficulties allied with the necessity to prepare separate exam papers for candidates in places distant from the usual examination centres.

The possibilities of permitting F5 transmissions on a part of the 23cm band appear hopeful on a trial period basis. If this eventuates, it will then be possible to evaluate the results thereafter to determine whether F5 could be considered for higher bands (e.g. 5 cm) for which surplus equipment is becoming available.

Nothing fresh can be reported concerning the application for amateurs to use the 50 to 52 MHz part of the 6m band except that it is being investigated on a similar basis to the recent New Zealanders use of 50-50.15 outside the hours of programmes of the TV station in that part of the spectrum.

A short discussion took place in relation to instances noted of amateur stations breaching on air the prohibition on advertising, for example, that certain specific items of equipment could be obtained from a named supplier.

It was noted that the principle of local Joint Committees in each State had been accepted and would be fostered. It was also noted with approbation that one particular post had been created in Central Office to handle amateur radio matters and that this post had now been filled.

1980 CONVENTION

The 1980 Federal Convention is scheduled to be held in Melbourne (Brighton Savoy Motel, as usual) from 25th to 27th April inclusive.

At the time of writing many Agenda Items have been received from various Divisions. A few more are expected.

One item which may generate considerable interest is the subject of the **Amateur Advisory Committee** *system. There is little doubt that the "explosion" of interest in radio communications during the past few years has brought with it a number of undesirable aspects, one being the presence of pirates on amateur bands. Who, except an experienced amateur, could detect these people? A pirate well grounded in amateur communications is even more difficult to detect until the QSL cards begin rolling in for bogus QSOs. This is not only an Australian problem. Read some of the overseas DX columns.*

Some amateurs might ask why anyone should get disturbed about all this. Hopefully such lamentable ignorance is rare. Basically, pseudo-amateur pirates white-ant the whole foundation of amateur radio quite apart from a genuine amateur being unaware of what "he" said during "his" contacts!

What can be done by genuinely licensed amateurs to combat this menace? Nothing useful can be gained by confrontation. In some situations confrontation could be dangerous. What machinery exists or can be used to detect pirates? Almost in the same breath can be mentioned intruders because both occupy band space and both should not be there. Much has been achieved world-wide by Intruder Watchers (despite the "woodpecker" still going strong in the face of highest level diplomatic representations) but the lack of interest in IW by the vast majority of Australian amateurs can only be explained by apathy or misplaced tolerance.

Then there is the situation where an amateur transgresses the Regulations or is suspected of having done so. This is what the Amateur Advisory Committee system was designed to handle — a buffer state between the spectrum policeman and the individual amateur. In the old days it was normal practice for one amateur to draw the attention of another to poor signal intelligibility, rough notes, harmonics, spurii and many other sub-standard occurrences. This was carried out in the friendliest possible way and has done a lot towards self-regulation. Unfortunately not every recipient takes advice in a friendly manner.

Are all these things, pirates, intruders, sub-standard occurrences, capable of being channelised through one system? And how are they processed in overseas countries? Does the amateur service here want a separate system for each? These are the kinds of things this Agenda Item is all about.

BAND PLANS

A VK1 Agenda Item calls for re-affirmation of conformity with VHF and UHF band plans. Another, from VK5, seeks a means to encourage amateurs to respect the gentleman's agreement on band segments devoted to CW and telephony parts of the bands.

This last Agenda Item ties in with another from VK5 proposing that the Department be asked to drop the lower limit for Novices on 80m to 3500 kHz instead of 3525 kHz. Comments were that Novice licensees have great difficulty in working DX on "their" 10 kHz CW segment and the ratio of 2 to 1 between full calls and Novice calls according to statistics; also that many Novices cannot up-grade for various different reasons.

70 cm

VK2 propose that channel numbers in the FM portion of 70 cm ending in 25 or 75 should be classified as secondary repeater channels and that the secondary simplex channels should be altered to 438.5 and 439.5 MHz. Also proposed was that all the other channels ending in 00 or 50 in the 433 to 435 and 438 to 440 MHz windows should be classified as secondary simplex channels.

Another Agenda Item from VK2 proposes that the WIA should seek alternative channels in the 500 to 900 MHz (approx.) region for ATV if the present 50cm temporary allocation is withdrawn. The comments thereon suggest there are practical difficulties in transmitting a signal with sufficient useful power on the next band up (i.e. 23cm) which is outside the range of UHF tuners and that post-WARC 79 ZLs will have the band 610-620 MHz on a secondary basis by footnote in the frequency tables.

MICROWAVES

VK2 also asks for a progress report on the policy to use F5 on amateur microwave bands, especially 5cm for which surplus equipment has become available.

CHANNEL 0 AND 5A (6m)

No recent Convention would be complete without an Agenda Item calling for reports on the Channel 0 and 5A situation. This from VK2. In 1978 it was decided to seek approval in principle from the Department for 6m repeaters. VK2 now suggest an investigation of a single test channel for evaluation purposes.

NEW BANDS

VK2 has two Agenda Items relating to the projected new bands out of WARC 79 on 10, 18 and 24 MHz. One wants pressures to have them allocated as soon as possible and the other proposes higher operating requirements be considered for them because of being so narrow — for example, SSB be limited to a few stations where the operators should possess higher theory qualifications. Also that CW of 20 w.p.m. or a special RTTY exam be discussed in connection with CW or RTTY segments.

10m FM

For FM stations in the 29 MHz part of the 10m band VK2 proposes representations to the Department to permit 7.5 kHz as the authorised maximum deviation. This part of the band is becoming used in the USA for FM where deviations in excess of 5 kHz have been observed, so it is stated. 7.5 kHz deviation conforms with VHF practice whilst the existing 3 kHz FM deviation on HF offers little, if any, noise reduction benefit over A3 and makes contacts with stations using greater deviations difficult — also that equipment for this is becoming readily available.

VARIOUS

VK5 wants the Department to advise new licensees of the right to suppress publication in the WIA Call Book of the licensee's name and address. VK1 proposes cancellation of the 1946 policy that the Federal Executive should be located in the same State as the Central Office of the Department on the grounds that a small Division would be hard pressed to find enough amateurs for both Federal and Divisional office bearers. Also that modern communications — along with a small local Committee (perhaps assisted from Sydney) for liaison — renders the old policy outdated and unworkable.

The Executive will introduce a number of Agenda Items, mainly procedural. These relate to IARU and WARC 79, standardisation of the WIA membership application form and the Federal Constitution. Of two others, one asks for progress reports, and if necessary re-evaluation, of the educational material to be prepared using the $3500 special donation received from the sale of equipment from Dick Smith Electronics some 18 months ago. The other proposes that the Department be asked to remove from amateur licence application forms the requirement to list the equipment it is proposed to use.

Another procedural item, from VK2, asks for a report on recruitment and publicity activities of the Institute whilst another proposes frequency details for 6m band repeaters. It is believed that some other Agenda Items have been formulated but have not yet been submitted. The 30 day notice for Agenda Items expires on 25th March.

MEETINGS

At an Executive Meeting on 25th February the lateness of mailing out the February edition of AR was discussed and it was noted that this occurred for reasons outside WIA control. It was also noted that over 6000 subscriptions for 1980 had been received and processed and that a telex had been sent by the Victorian Division about Channel 0 to the Prime Minister and Minister for P. and T. This meeting received visitors in the persons of Alan Noble VK3BBM, Alternate Federal Councillor for VK3, Geoff Atkinson VK3YFA, VK3 Secretary, and Trevor Pitman VK3YTP/NMJ, who has agreed to co-ordinate Federal Contests and Awards.

One meeting of the VHFAC on 14th February discussed TV Channel 0 and 5A matters. Confirmation was also given to VK4ZEZ/NFR for a VK4 distance record of 11857.3 km on 6m for his QSO on 2nd March last year with N6CT.

At the Publications Committee meeting on 5th February the future of AR was discussed in detail. It was agreed to review this again at the April meeting.

The Executive wishes to acknowledge with grateful thanks the receipt of WARC 79 donations from members —

LIST No. 12

VK2ZJC	*$8.00*
VK5FO	*$10.00*

■

WAC OR WAZ

here's the antenna jazz — SCALAR — they work anywhere

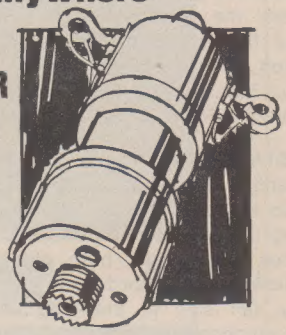

1. W2AU ANSULATOR
Unadilla/Reyco with built-in lightning arrestor.
Hang up hook. Weatherised.
Rugged 600lb. pull.
Use on Vees, Doublets, Quads, Yagis, Folded Dipoles.

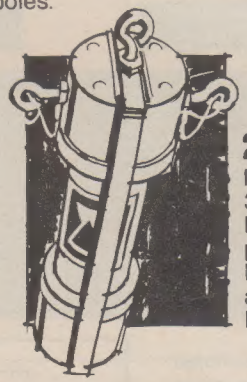

2. W2AU BALUN
From 50-70 ohms/to 200-300 ohms balanced
Broadband 3-40 MHz. 1Kw plus. Weatherproof.
Lightning arrestor. Balances antenna current.
Restores full gain.

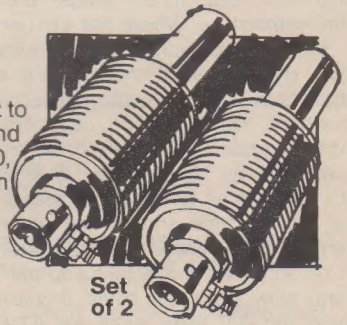

3. MULTIBAND ANTENNA COILS
Reyco reliable from 7MHz to 28 MHz. Standard five band coils operate on 10, 15, 20, 40 and 80 with wire length of 108ft. Provide perfect dipoles and used together obtain five band operation with total wire length of 95ft.

Set of 2

Power House or Ham Shack — 10.2 on Scalar

Whip this coupon back Q.R.Q. to Scalar

Please send ☐ order form
Or ☐ literature giving more information.
Please print.

NAME.....
ADDRESS.....
STATE..... POSTCODE .....

bankcard welcome here

73's from SCALAR INDUSTRIES PTY. LTD.
20 Shelley Avenue, Kilsyth, Vic. 3137 (03) 725 9677
N.S.W. 20 The Strand, Penshurst, 2222 (02) 570 1788
QLD. 969 Ann Street, Fortitude Valley, 4006 (07) 52 2594

A 40 WATT 432 MHz LINEAR AMPLIFIER

This amplifier is based on a design that appeared in QST for July 1977. The board dimensions have been retained but the transistors altered to 2N5946 and MRF646 to give it 12V capability. It will produce in excess of 40 watts PEP when driven with 3 watts PEP.

Ian Glanville VK3AQU
23 Falcon Rd., Macleod 3085

For those of you who already have 10 watt exciters the section to the right of the dotted line could be produced. I should mention at this stage that the transistors are not cheap. The MRF646 is about $28 and the 2N5946 is $17 approximately.

CONSTRUCTION

The entire unit is made of PC board with double sided board as the base, one side having the lines etched on it. The walls of the box are 1⅝ in. high with a partition as shown. The board size and lines are shown full size in the diagram with the other components drawn in to give you an idea as to their placement, but not to scale. As it was unlikely that more than just the one of these units would be made I simply covered the PC board with clear contact adhesive and traced the outline on to the board. The areas to be etched were then cut out with a sharp knife and the board dropped into the ferric chloride etchant. Remember to cover both sides of the board.

Next drill and file to shape the holes for the transistors. Where the emitter leads will be located solder some very thin copper shim between the top and bottom of the board. Do the same with a piece of wire where the diode and capacitor leads will be grounded one ½ in. or so from the etched landing. Now fix the board to the heat sink using plenty of brass bolts. Once this is done and all the other components are in place the transistors can then be soldered in. Be sure you use plenty of heat sink and then some if you intend running the full forty watts for ATV.

ALIGNMENT

Check all your work very carefully. If you make a mistake now it will cost money.

Disconnect all power to the MRF646 stage and place an ammeter between RFC5 and the feed through feeding the collector of the 2N5946. Switch on. The collector idle current should be around 100 mA. Now place the meter in a similar position in the collector circuit of the MRF646 and check for 300-400 mA idle current. If everything checks out okay then apply drive power and tune for maximum into a wattmeter or dummy load SWR bridge combination. When you have determined that the output appears to be clean and linear, put it to air for a report. ■

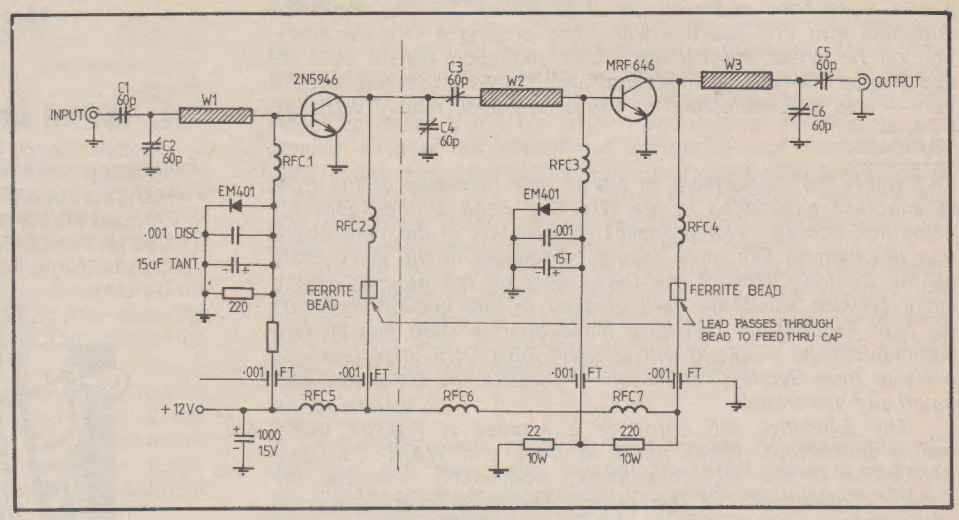

FIGURE 1: Circuit diagram

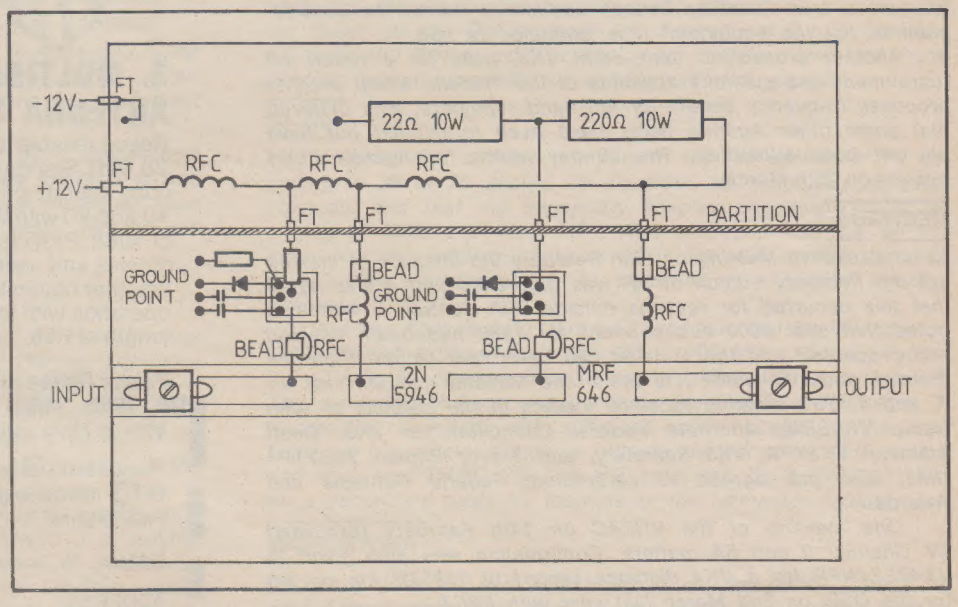

FIGURE 3: Layout of the printed-circuit board. Glass-epoxy board 1/32 inch thick is used, with one-ounce copper on both sides.

RFC 1, 3, couple of turns through ferrite bead, 24g enam.

Capacitors are 60 pF ceramic compression type.

RFC 2, 4, 5, 6 and M, 170 mm 5/32 in. diam. 18g wire, close wound.

C1 and C5 mounted between input and output coax connectors W1 and W3 respectively.

The power output may be increased by bumping up the supply voltage to 15-16 volts DC.

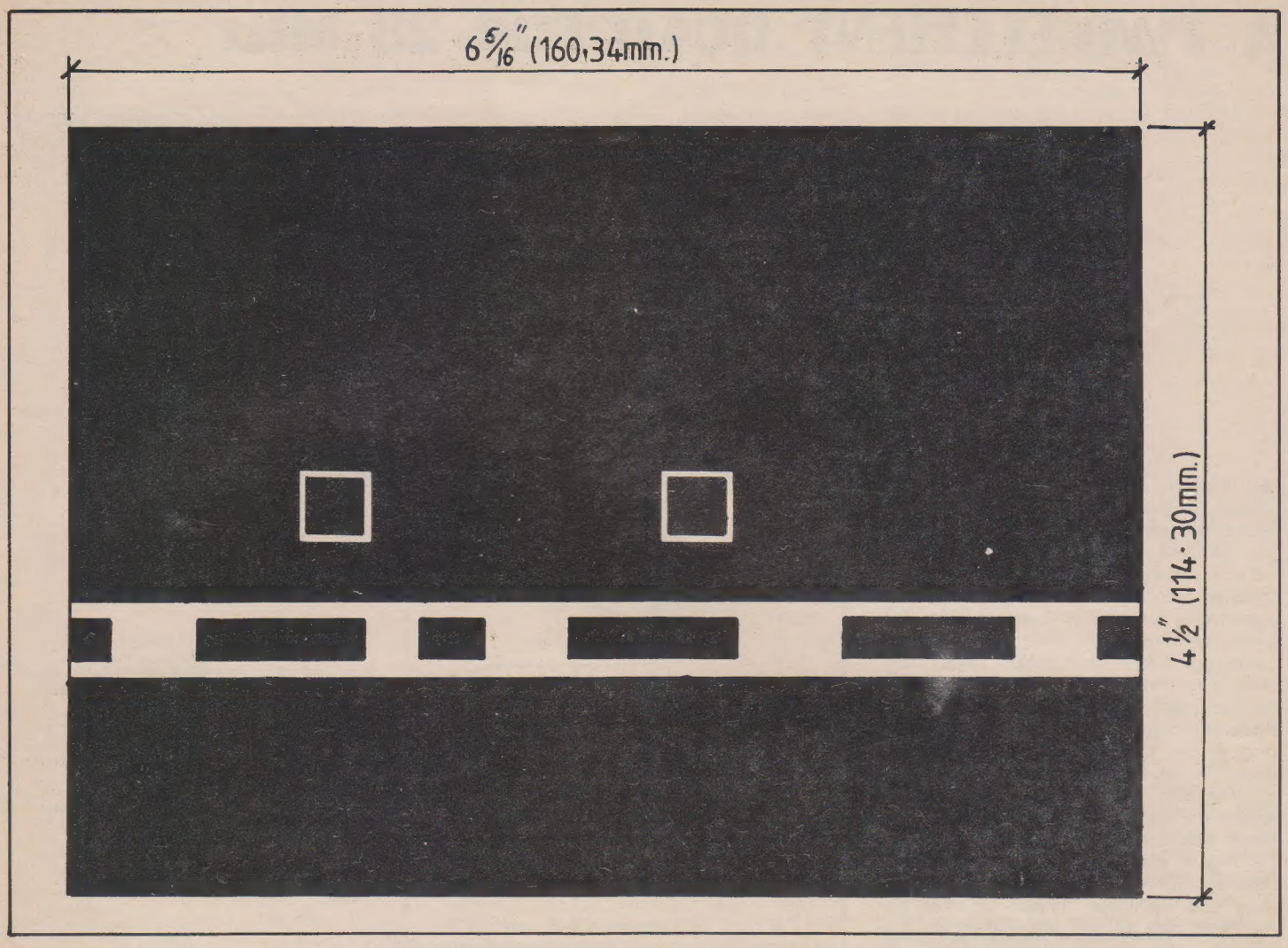

FIGURE 2: Printed circuit board — copper side, full size

THE MOLE

Hey Dads — here's something from the New Yorker magazine of 13-8-1979 for the wall of your shack (Tnx VK3OB —

"There goes The Mole!" Mother cried. "You children look quick or you'll miss him!" It was Father, disappearing down the cellar stairs. Every day he'd retreat to his radio shack, stay past midnight.

He'd built a rig others envied, came from miles around to see. Every day he'd jam the airwaves, ruin the blocks TV. Every day we'd hear him sit before the mike calling "CQ, CQ, calling CQ" to whoever listened at the other end. He once claimed to reach Moscow. "Ralph's the handle, calling from W3CAT, the Old Cat Station — W-3-Cat-Alley-Tail." He *was* a handsome cat; Mother once adored him, I know.

But what I'll never know is: Why he'd talk to any stranger far away and not once climb back up the stairs to the five of us to say, "Hello . . . Hello . . . Hello . . . Hello".

Robert Phillips. ■

SALES PERSON

A WELL MOTIVATED SALES PERSON IS REQUIRED FOR OUR EXPANDING SYDNEY OPERATION AT CROWS NEST.

THE POSITION INVOLVES SELLING OF A QUALITY RANGE OF POPULAR AMATEUR RADIO EQUIPMENT.

THE APPLICANT SHOULD BE AN ENTHUSIASTIC INDIVIDUAL, WHO IS IN POSSESSION OF AN AMATEUR CERTIFICATE OF PROFICIENCY.

APPLICATIONS SHOULD BE IN WRITING IN THE FIRST INSTANCE AND INCLUDE DETAILS OF WORK EXPERIENCE, EDUCATION ETC. —

TO: MR. L. WADE
VICOM INTERNATIONAL PTY. LIMITED
339 PACIFIC HIGHWAY,
CROWS NEST, 2065.
PHONE: 436 2766.

AFTERTHOUGHTS

In the February 1980 issue of Amateur Radio, page 9 (Review — R1000 Receiver), it was incorrectly stated that all enquiries regarding the Kenwood R1000 Receiver should be directed to Vicom International — **This is not the case.** All enquiries should be directed to **Trio Kenwood Pty. Ltd.,** 31 Whiting Street, Artarmon, Sydney N.S.W. 2064. Telephone (02) 438 1277. ■

A TWO-ELEMENT QUAD FOR 28 MHz

Ron S. Beames VK5NSB
2 Wheadon St., Osborne, SA 5017

This quad was originally built by Sid VK3CI and the author has his permission to give details of it for those interested. Recorded tests on various signals have shown between 3 and 6 S-points stronger signal from the front of the quad than the back.

The element spacing is 2 ft. 6 in. The reflector element is 36 ft. 4 in. long, formed into a square loop with the ends joined and soldered together (after fitting). The radiator element is 34 ft. 8 in. long, terminated on a 3 in. x 2 in. x ¼ in. thick polystyrene block with 2 in. spacing between the ends of the element. (Both elements are 7/029 bare copper wire.) The quad is fed with 75 ohm coax cable to the terminal block. The balun is a length of 75 ohm coax cable, cut to exactly 5 ft. 8 in. long; at one end the inner conductor and braid are soldered together and sealed up. The other end of the balun is connected on to the terminal block with the feeder cable, but connected in reverse to the feeder cable so that conductor and braid are joined together on one side and braid and conductor joined together on the other side of the terminal block.

The construction is easy. The centre section of the quad is a piece of marine plywood 18 in. x 18 in. x ¾ in. thick, well painted after all holes were drilled. The element arms use four 12 ft. 6 in. lengths of 1 in. orange PVC conduit. First cut off the coupling ends on the conduit and then cut each length exactly in halves. These are saddled across each corner of the centre section on both sides, using 1 in. galvanized conduit saddles and 1½ in. x ¼ in. galvanized gutter bolts and nuts.

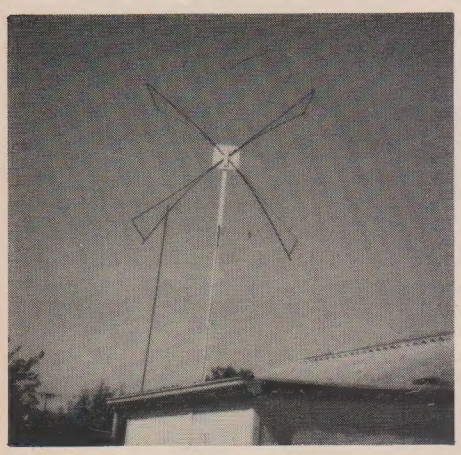

28 MHz Quad

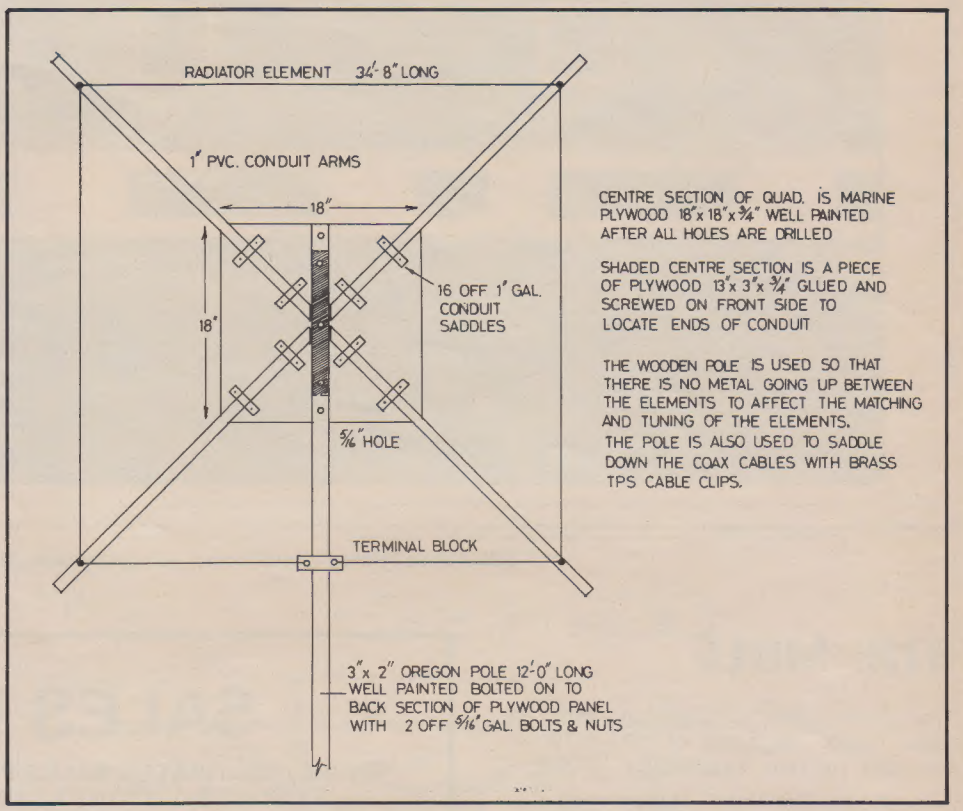

FIGURE 2: Radiator. Galvanised gutter bolts and nuts 1½" x ¼" used for securing conduit saddles. Drill 5/32" hole in spreaders 6" from end. 1" PVC conduit arms butt up against pole on back of centre section for reflector element.

The spreaders use four lengths of ¾ in. orange PVC conduit cut to 2 ft. 6 in. long. The ends of the 1 in. conduit saddled across each corner of the centre section are spread out and the 2 ft. 6 in. conduit spreaders are clamped on to the ends of the 1 in. conduit. This gives the 2 ft. 6 in. spacing between the two elements. Note that orange PVC conduit was used because the grey conduit goes very brittle in the weather. The clamps are U-strips of 24g galvanized iron ¾ in. wide x 5½ in. long bolted to the ¾ spreaders with ⅛ in. x 1 in. brass bolts.

The 18 in. x 18 in. x ¾ in. thick centre section is bolted on to the end of a 3 in. x 2 in. oregon wooden pole, 12 ft. long, which is well painted. A wooden pole is used so that the tuning and matching of the elements is not affected by having a metal pole running up between them. The pole is also used to saddle down the coax cables with brass TNS cable clips. The bottom end of the wooden pole is bolted on to a length of 2 in. galvanized water pipe with two holes drilled in the pole, one 6 in. from the end and the second 4 ft. in from the end.

Two mild steel plates 5 in. x 3 in. x ¼ in. thick were welded on to the galvanized water pipe where the timber pole bolts on, so that the timber is bolted to a

flat surface, using two galvanized bolts and nuts 5 in. x ½ in. The pipe at this QTH is mounted on the end of the shack, saddled at the bottom and at the top on to the fascia board with the saddles left slack enough so that the quad can be rotated.

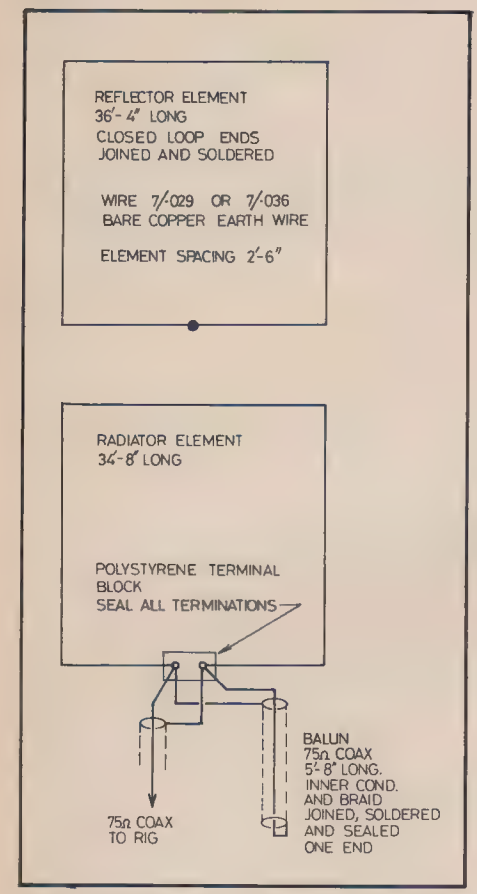

FIG. 1: Wire used — 7.029 or 7.036 bare copper earth wire. Terminal block — polystyrene 3" x 2" x ¼", drill terminal holes 2" apart.

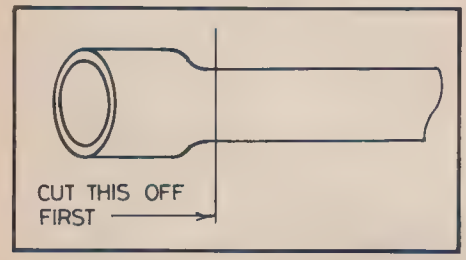

FIG. 4: Material required — 4 lengths of 1" PVC orange conduit 12'6" long (grey conduit becomes brittle in weather). First cut off the coupling ends, then cut each length exactly in half. 4 lengths ¾" PVC conduit 2'6" long for spreader end supports. 4 lengths ¾" PVC conduit 12" long to insert in ends of 1" PVC conduit to take reflector element.

SUPPORT OUR ADVERTISERS

WHEN PURCHASING GOODS, SAY YOU SAW THEM ADVERTISED IN **AR**

For the radiator element four 5/32 in. holes were drilled 6 in. in from the ends of the 1 in. conduit arms.

For the reflector element, four lengths of ¾ in. PVC conduit, 12 in. long, were inserted in the ends of the 1 in. conduit and held in position with two brass metal threads 1½ in. x 3/16 in. through the conduit, leaving 2 in. of ¾ in. conduit protruding out from the ends of the 1 in. conduit. A 5/32 in. hole is drilled in the ¾ in. conduit one inch out from the end of the 1 in. conduit for the reflector element. ■

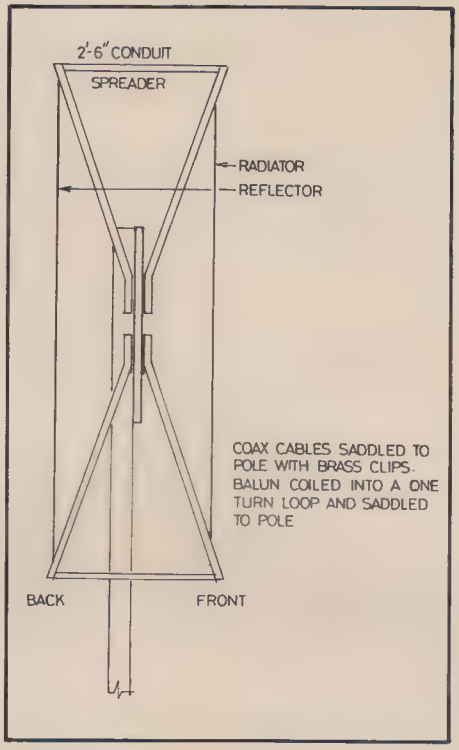

FIG. 3: Side view of quad. 2 x 5/16" galv. bolts and nuts through pole and centre section, conduit spreader arms approx. 6'3" long. End supports 2'6" long ¾" PVC conduit, clamped to tips of spreaders. Clamps constructed from strips of galv. iron 5½" x ¾" and wrapped around spreader tips and end supports, and held in position with ⅛" brass threads. (See Figs. 7 and 8.)

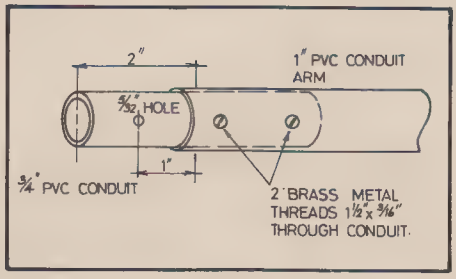

FIG. 5: Details for mounting reflector element.

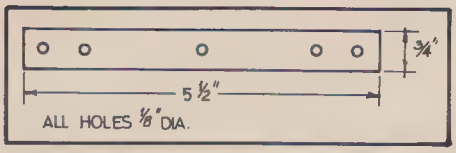

FIG. 8: Clamp construction; strap wrapped around 1" PVC conduit on to ¾" PVC conduit and held in position with ⅛" brass metal threads in ¾" conduit, and a long ⅛" PK screw into the 1" PVC conduit.

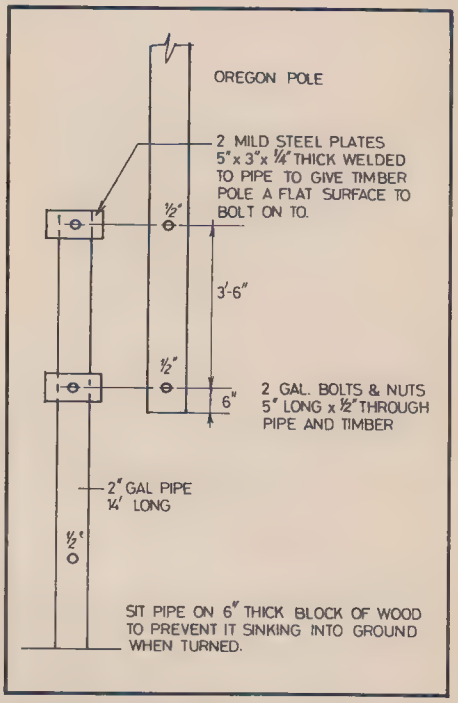

FIG. 6: Mounting details of quad. The quad at the author's QTH is mounted at the end of the shack, saddled at the bottom and at the top on the fascia board, with the saddles left slack enough to enable the quad to be rotated (by hand). — (Mounting naturally can be left to the discretion of the constructor, perhaps utilising various systems of rotators etc. — Ed.)

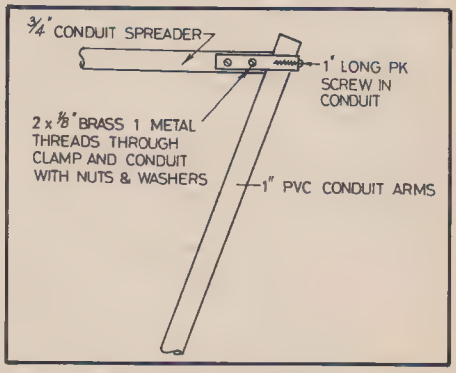

FIG. 7: Side view of quad arrangement for clamping PVC conduits together. 24 gauge galv. iron or brass strips for clamps, see Fig. 8.

HELP

WITH INTRUDER WATCHING

A CURE FOR HIGH LEVEL MIXING WITH THE TS600

D. Minchin VK5KK
Templers Road, Wasleys 5400.

Like most equipment from time to time small deficiencies in design pop up and create varying degrees of displeasure in operation. The Kenwood TS600 while one of the more reliable and popular 6 metre rigs ever does have a small problem with very strong in-band and out-of-band signals mixing to produce unwanted signals within the tuning range.

First a small description of the circuit. The signal on entering the antenna terminal passes through an extensive low-pass filter unit which is primarily intended to filter out transmitter harmonics and spurii. This then goes via the coaxial relay to the receiver front end board. On the Trio TS600 intended for the Japanese market quite a few appeared with a pre-amp stage. But most Kenwood export models have omitted this and the front end looks like that shown in Fig. 1. You will note that D1 and C51 form a division circuit across the front end circuit (T1) and the antenna is fed via a 100 pF capacitor to the centre of the two components. In effect it could be said that the incoming signal is fed via D1 to the first input circuit and this is where the problem starts. It is not too hard to see that with strong signals being passed by the low-pass filter (up to 65 MHz) there is no further preselection until after the diode (D1 = 1SV50 Varicap). Hence the following observations.

Two examples are given and results vary due to the variable nature of some factors. Firstly mixing between a very strong 6 metre signal and broadcast stations. Resultant mixing varies due to MW pickup of certain antenna types, earthing, and proximity to broadcast stations. In Adelaide several TS600 owners experience mixing between VK5VF on 53.0 MHz and almost every local and interstate broadcast station at night! This generally occurs when directly beaming at the beacon which runs 25 watts. If medium wave signals are directly fed to the antenna the situation is quite noticeable with 6 metre stations. Secondly mixing with TV signals from Channels 0, 1 and 2. Even though my QTH is some 40 miles from a Channel 2 transmitter it is quite possible to get mixing with the 64.25 MHz video. The most graphic description of the mixing is when you are suddenly confronted with LSB around 50.0 to 50.1 MHz, usually not very strong. CW may appear above 50.2 MHz and various other strange HF signals above there especially at night. It is helped a bit if your antenna

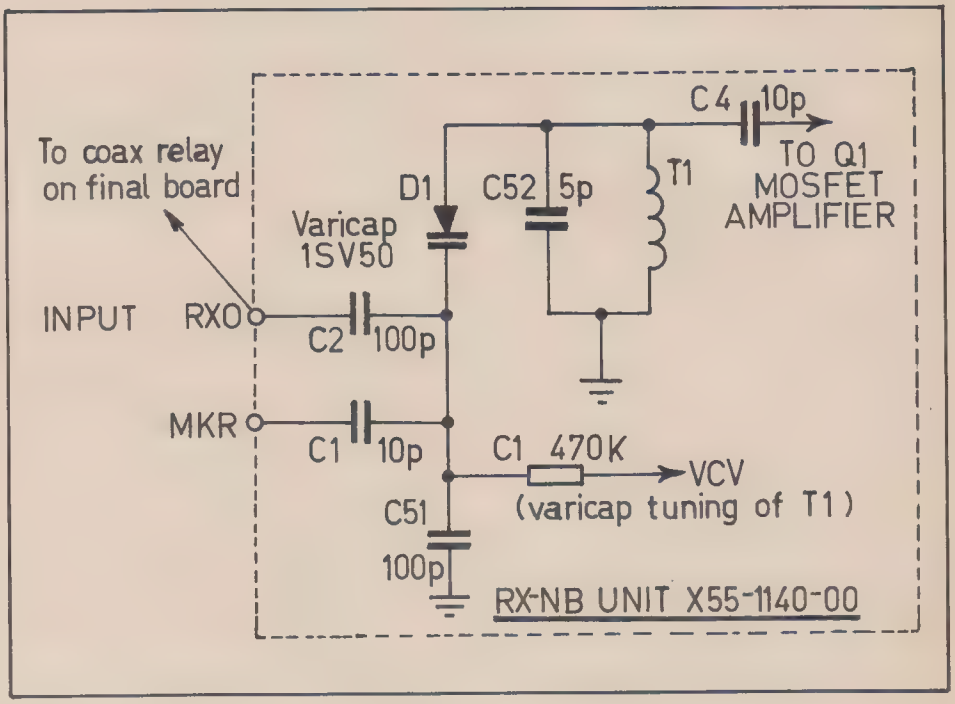

FIG. 1: TS600 Input Circuit.

somehow works well on 64.25 MHz. A lot of good 6 metre beams give enough Channel 2 to mix. By now it should have been realised that 64.25 minus 50 leaves you with 14.250 MHz, etc.!

Fortunately a cure is not very hard to find and it is rather an addition to the circuit rather than a modification. A simple 3 element Butterworth high-pass filter with a fc of about 25 MHz is installed in the

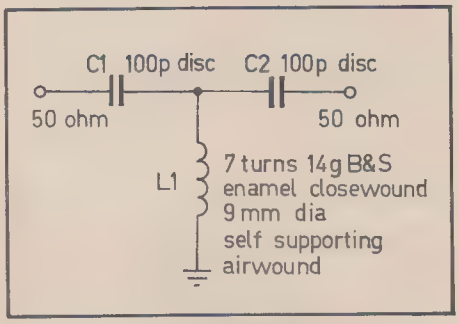

FIG. 2: Filter.
fc = 25 MHz
k = 3 (No. of elements)

receive line running from the coaxial relay on the PA board under the top cover. 25 MHz was chosen as the majority of unwanted signals seemed to occur below 15 to 20 MHz. It is not necessary to suppress the both parts of the mixing, hence above 25 MHz no filtering other than the original low-pass filter is used. In theoretical calculations using the formula $A = 10 \log [1 + (fc/f)\ 2k]$, the attenuation should be as follows in Table 1. 15 dB attenuation on 14.25 MHz was confirmed with a signal generator. Below 1.6 MHz no attenuation checks were taken but a simple test ensured that the attenuation was quite sufficient. A 15 watt 52 MHz transmitter was fired into a 6 element beam directed to the home station antenna 100 metres away. Without filtering the TS600 could receive all broadcast stations within 200 km at S9 or over. With filtering no audible signals whatsoever. This partially confirms the theoretical results at least. The reduction by 15 dB of 14 MHz seemed all that was necessary as the strength of the mixed signals resulting from here was not great. Should more attenuation be required a more complex filter may be employed. Theoretical loss on 6 metres is less than 0.1 dB and in practice no observable difference occurred. No allowance was made for the 100 pF capacitor feeding the input circuitry in calculation of capacitance values in the filter. When the filter was checked out using 50 ohm terminations the performance was close to that while installed in circuit.

Installation is simple. Locate the main "Final Unit X56-1220-00". On some TS600s the receive connection consists of an RCA connector close to the coaxial relay whilst in others the coax to the receive board is simply soldered to wire-wrap stakes. Above this point a screw is located on a plated metal partition. This is used as an earth point for the filter. The filter is placed in line with the receive coax coming from that board. No shielding is used and the components are mounted between the board and the earthing point.

In all cases, so far, the filter has been sufficient to cure mixing problems of the type outlined. However should the problem be associated with oxidation of the antenna, etc., then obviously the transceiver is not to blame. The same goes for any other receiving set-up on 6 metres but here's something to try.

TABLE 1

Frequency	Attenuation (Theoretical)
1.6 MHz	51 dB
3.5 MHz	51 dB
10 MHz	24 dB
14.25 MHz	15 dB
25 MHz	3 dB
52 MHz	0.1 dB

■

WHAT IS AMATEUR RADIO?

(With acknowledgment to SARL, Durban Branch)

Amateur Radio is not a new phenomenon but it is a hobby and pastime which is little understood by the general public.

Amateur Radio can trace its origins back to before the turn of the century, to the days of the great pioneers of Hertz, Marconi and others.

THE AMATEUR RADIO SERVICE has no formal champion or spokesman in most countries.

Therefore it falls to radio amateurs themselves, through their national societies, to perform this function on behalf not only of existing amateurs but of all those who will one day elect to enter the field of future generations of radio amateurs and — most importantly — of the larger society which becomes the ultimate recipient of the enormous benefits provided by a strong amateur radio service.

In stating the needs of amateur radio to our respective administrations, it is important to emphasize that we are presenting the case for a vitally important community resource — not merely seeking selfish ends.

Amateur radio constitutes a privilege available to the citizens of each progressive nation.

It provides valuable training, produces international good will, and yields a variety of public service benefits. Amateur radio enhances both the national image and the quality of life of its citizens.

The dimensions of its contribution are many and, depending upon local regulations, vary somewhat in nature and emphasis among the members of the world's family of nations.

Briefly amateur radio:

Develops a national source of electronics expertise.

Contributes and demonstrates electronics innovations.

Explores propagation phenomena and develops efficient spectrum utilization techniques.

Provides emergency communications resources.

Promotes international friendship and understanding.

Is available to all citizens, including the young, the old, and the physically handicapped.

Is a disciplined and self-regulating service.

Is a rapidly growing service.

Amateur radio is a self-teaching tool of proven effectiveness.

It offers the opportunity for learning electronics and communications technology at home in one's spare time, while affording ready access to assistance and counsel from experienced teachers in every area from electronics.

Amateur radio training develops a vital supply of electronics expertise and communications resources for the heightened demands for skilled manpower that arise from national and international emergencies of all kinds, to lack these is to be vulnerable.

Perhaps best of all, amateur radio offers a challenging enriching, productive and socially-constructive activity for young people in our increasingly complex society.

Amateur radio provides almost unlimited opportunities for live experimentation in a wide variety of communications disciplines, and has yielded developments and breakthroughs in many specialised areas including, but not limited to, the following:

Propagation research below 30 MHz and currently in the microwave region.

Superiority of long distance single sideband voice transmissions.

Low cost, high performance satellite transponders and ear terminals.

High efficiency VHF repeater systems.

Slow-scan long distance television systems.

Directional antenna design and application.

Long distance communication employing very low power devices.

Ultra narrow band voice and code transmission and reception.

Procedures and techniques for improved spectrum utilization.

Low power, extended range, narrowband microwave communication.

A widely recognised aspect of amateur radio activity is the provision of emergency communications services in time of local, national or international disaster. From the earliest beginnings, amateur radio has responded swiftly and effectively to the call for communications assistance when normal channels are lost as the result of calamity.

The greater society's dependence upon communication services becomes, the more sorely these are missed when disruptions occur. Amateur radio has, time and again, been the vital link in bringing first word of disasters such as floods, hurricanes, earthquakes, fires, tidal waves, volcanic eruptions and tornados.

Because radio amateurs tend to be distributed evenly among the populations in most countries of the world, they are at or close to the scene wherever serious emergencies occur, and thus are usually the source of first news and the most active in providing communications services for early relief efforts.

Radio amateurs take pride in their ability to render this unique public service and work at maintaining a state of readiness through a variety of training exercises that include the operation of efficient and widely publicized networks, formalized operating competitions which lead to improvement of equipment and operating efficiency, and well-supported field exercises employing independent sources of electrical power for their equipment.

Amateur communications circuits are tested daily and extend into almost every region in the civilized world, around the clock.

Furthermore, radio amateurs typically maintain close ties with government and relief agency officials to assure prompt availability of their emergency communications resources in the event of need, whether this be a major disaster affecting the lives of hundreds of thousands of people, or locating a special medicine for an ailing child in some remote outpost.

And it is totally a volunteer resource, costing the public nothing. ■

Vicom's got it!

Australia's largest range of Ham Gear

Base or Mobile — we've got the gear to get you on air and keep you there! And all our sales are supported by technical back-up that's unequalled in the industry.

Count on VICOM for personalised service every step of the way. Give us a call today.

NEW TONO 7000E COMMUNICATIONS COMPUTER RTTY/CW send /receiver NOW ONLY $899

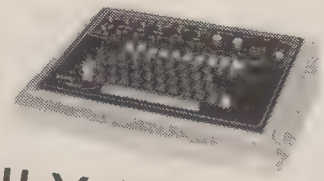

ICOM GEAR

IC225A	2m FM 25watt synthesised - $425 00
IC502A	6m SSB portable $289 00
IC251A	2m all mode ac/dc - $847 00
IC551	6m, all mode all options - 859 00
IC551D	6m all mode, 10w, PBT & VOX - $849.00
ICPS20	240V pwr supply - $230.00
ICSP2	matching speaker - $56.00
IC2A	2m FM synthesised handheld - $279.00
IC260A	2m FM/ssb 10w mobile - $599.00
IC701	HF solid state 160m-10m transceiver $1195
IC22S	2m FM synthesised transceiver - $299 00 Quantity 5 - 10 — $299.00
IC280	2m FM remotable cpu controlled - $450.00
IC402	70cm ssb portable, 3 watts - $439 00
IC202S	2m ssb portable, 3 watts - $318.00

MICROPHONES

VM-1	Noise cancelling hand ptt, dynamic low Z Qty 10-15 — $10 00

MORSE KEYS

HK702	Deluxe Key with marble base - $41.00
HK708	Economy key - $23 00
HK706	Operator's key - $22.00
MK701	Manipulator (side-swiper) - $45 00

TONO 2m BI-LINEARS

MR900E	80-90W, incl RX preamp - $289 00
MR1300E	120-130W, incl Rx preamp - $350 00

RADIO TELETYPE TERMINAL

O-70000E	Tono TRRY CW/Baudot/ASC11 - $899.00
O-350	Theta 350 Tono receiver terminal - $599 00
HC-800	Tono Dot matrix printer - $999 00

TUBES

6DK6	Finals for Yaesu linears - $10.00
6JS6C	Finals for Yaesu transceiver - $10.00
12BY7A	Driver - $4 75
6146B	Finals - $13.00

VICOM ANTENNAS

VAR/2	Ringo 2m 6dB gain 135-170MHz - $55 00
VAH/80	80m helical whip - $28.00
VAH/40	40m helical whip - $28.00
VAH/20	20m helical whip - $28 00
VAH/15	15m helical whip - $28.00
VAH/10	10m helical whip - $28.00
VAB/2/5	5el yagi 8dBd gain 500W pep 2m - $35.00
VAB/2/10	10el yagi 12dBd gain 500W pep 2m - $74 00
VAB/7/16	16el yagi 15dBd 1KW pep 70cm - $53.00
VAB/6/5	5el yagi 9dBd gain 1KW pep 6m - $89 00

RAK ANTENNAS

LISTENER 3	Short wave Rx antenna - $49.00
LISTENER 1	Short wave Rx antenna - $22 00

HY-GAIN ANTENNAS

204BA	4el monobander for 20m - $259 00
203BA	3el beam 20m - $199.00

JAYBEAM ANTENNAS

5Y/2m	5el,2m 7 8 dBd gain, length 1 6m - $43 00
8Y/2m	8el,3m 9 5 dBd gain, length 3.8m - $51.00
D8/70cm	Twin 8el, 70cm, 12 3 dBd, 1.1m - $64 00
PBM 18/70	18el, 70cm, 14.9 dBd, 2 8m - $96.00
MBM 48/70	48 el, 70cm, 15.7 dBd, 1.83m - $83 00
MBM 88/70	88el, 70cm, 18.5 dBd, 3 98m - $105 00
PMH/2C	Phasing harness - $20 00
8XY/2m	2m cross yagi, 8el, 9.5 dBd, 2 8m - $99 00
12XY/70cm	70cm cross yagi 12el, 13 0 dBd 2 6m - $139

NAGARA

V4JR	40-10m trap vertical, 5.2m high - $99 00

SCALAR

M22T	1/4 wave 2m mobile whip, top only 1-4 - $7 5-9
M25T	5/8 wave 2m mobile whip, top only 1-4 - $14 5-9
BASE	B/L for above - $4 00

COAXIAL SWITCHES

CS201	2 position, high pwr, to 500MHz - $23.00
CS401	4 position, high pwr, to 500MHz - $59 00

BALUNS

AS-BL	Asahi 50 ohms for beams - $34.00
BL50A	50 ohm 4Kw 1:1 for dipoles - $32.00
BL70A	70 ohm 4Kw 1:1 for dipoles - $32.00

COAXIAL CHANGE-OVER RELAYS (DAIWA)

CX-2L	1.8 thru, 170MHz, 100W pep max - $69.00

AIRCRAFT RECEIVERS

747	16ch, ac/dc scanning, inc 4 xtals - $199 00 Qty 10-20
XTALS	Additional crystals - $7 50

BEARCAT SCANNERS (PROGRAMMABLE)

BEARCAT 210F	VHF/UHF, 10chs, ac/dc - $412 00
BEARCAT 220BF	20chs incl. aircraft AM - $556 00
BEARCAT 250FB	VHF/UHF, 50chs, ac/dc with 68-88 MHz - $556 00

KENWOOD

TS120S	poa
TS180S	poa
R1000	poa

CALL US FOR A GOOD DEAL ON KENWOOD PRICES!

AMATEUR RADIO EQUIPMENT

LDM-815	Dip meter, 1.5MHz-250MHz - $89.00
LPM-885	SWR/Wattmeter, 1W-100W - $97.00
LAC-895	Antenna coupler, 3.5MHz-28MHz - $182
LBO-310HAM	3" oscilloscope for HAM use. 20mV/4MHz $330.00
LA-31	HAM scope adaptor - $26.00

SWR/PWR METERS AND DUMMY LOADS

VC-2	Twim meters 3-15MHz with cal. chart - $35
SW110A	Daiwa 1.8 thru 150MHz - $79.00
SW210A	Daiwa 1.8 thru 150HMz 20/120W direct $99
CN620	Daiwa Cross-needle, 1.8 - 150MHz direct $99 00
CN630	Daiwa $140-450MHz, 20/200W direct read $135.00
CN650	Daiwa 1.2 - 2.5GHz, 2/20W, direct read $169
LPM-885	Leader SWR/PWR meter - $89 00
LPM-880	RF Power meter - $135 00
RW-155D	Kuranishi RF Powr meter - $185.00
RW-151D	Kuranishi RF Power meter - $165.00
RW-1002L	Kuranishi RF watt meter - $139.00

MAST HEAD DIVIDER

AD103X	Mast-head splitter 70cm/2m/Hf - $59.00

RF MATCHING TRANSFORMERS

PALOMAR	500W, switchable 6 impedances - $96.00

LOW PASS FILTERS (DAIWA)

FD30LS	32MHz, Fc, 200W, 3 stages Qty 1-10 - $20

ANTENNA COUPLERS

CL67A	Daiwa 1.9 - 28MHz 500w pep - $135.00
CNW217	Daiwa incl SWR/PWR meter, 200W - $165
MFJ901	MFJ Matches everything 1.8-30HMz - $119
MFJ16010	MFJ Random wire tuner $160-10M - $71
LAC-895	Leader 3 5 thru 28MHz - $169.00
CNA-1001	Daiwa, automatic, 200W - $269 00
CNA-2002	Daiwa, automatic, 2.5KW - $569 00

VICOM

SYDNEY: 339 Pacific Hwy,
CROWS NEST Ph 436 2766
MELBOURNE: 68 Eastern Rd. Sth Melb.
Ph 699 6700

Sydney: 635 6399, 436 2766
Adelaide: 272 8417, 43 7981
Brisbane: 48 6601, 38 4480
Perth: 321 3407, 446 3232
Hobart: 43 6337
DEALER ENQUIRIES INVITED

The Question we seem to get most often from our customers:

"WHEN IS ICOM COMING OUT WITH A HANDIE-TALKIE!"

ICOM IC-2A SYNTHESISED 2 METRE HANDIE TALKIE

FEATURES YOU'VE WANTED

- ☐ 800 T/R Channels. synthesised.
- ☐ 1.5 Watt Output High/Low Power Battery Saving Switch to .15 Watt.
- ☐ Separate built in Speaker & Mic. Excellent audio quality.
- ☐ Compact. About the size of a $2 note.
- ☐ Variable size Nicad Power Pack, 3 sizes available to suit your needs. (250 MA standard). Makes the IC-2A the most compact synthesised HT on the market.
- ☐ ICOM level Receiver Performance-ICOM Quality Receiver in a compact package (.2uv/ 20db typical)
- ☐ Optional Desk Charger, Speaker/Mic available.
- ☐ With slip on/slip off Bottom Nicad Pack, you can vary the size of the HT from about 116 mm high to 175 mm high. Easy to carry extra Snap-on packs with you for extended trips.
- ☐ Backed by **VICOM** 90 day warranty.

TYPICAL TECHNICAL CHARACTERISTICS
(Australian model)

GENERAL: Frequency Coverage 144.000 - 147.995 HMz, Power Supply Requirements DC 8.4V with attendant batteries, Current Drain Transmitting: High (1.5w) approx. 600mA, Low: (0.15W) approx. 200mA, Receiving: At max audio approx. 140mA Squelched approx. 20mA, Dimensions 116.5mm(H) x 65mm (W) x 35mm(D) without battery case, Battery case: 49mm(H) x 65mm(W) x 35mm(D), Net Weight 450g including batteries and flexible antenna **TRANSMISSION** Transmission Power High: 1.5w (at 8.4v) Low: 0.15w, Max. Frequency Deviation 5 KHz, Modulation System Variable reactance frequency modulation, Spurious Emission More than 60dB below carrier, Microphone Built-in electric condenser microphone optional 600 ohm dynamic microphone can be used. **RECEPTION** Sensitivity Less than 0.4uV for 20dB Noise quieting, Selectivity #7.5KHz At the -6dB point, #15KHz At the -60dB point, Audio Output, More than 300mW.

actual size: Cut out along the dotted line and put the ICOM IC-2A in the palm of your hand.

ICOM IC-2A

TOP VIEW

BNC antenna connector
"Rubber Duckie" standard
transmit indicator
squelch
volume control
on/off
5 khz channel selection
10 khz channel selection
speaker/mic jack

ICOM

only $279

THE ANSWER IS: NOW!

ALL 800 channels of it!

VICOM

Distributed in Australia by VICOM

THE DJ4LB ATV TRANSMITTER AS THE BASIS FOR A 70 cm SSB TRANSVERTER

Ian Glanville VK3AQU
23 Falcon Road, Macleod, 3085

The DJ4LB ATV transmitter has proved very popular in amateur television circles for some time. But its usefulness is not restricted to TV. Some sub-assemblies can be used for 70 cm SSB.

The modular design of the DJ4LB makes it very easy to construct, and the single-sided board layout will help eliminate a lot of the fear that some people have for UHF construction. The two units we are interested in are the DJ4LB 003 oscillator chain and the DJ4LB 004 transmit mixer. Both boards measure 135 mm x 50 mm. In the original article quite some time was devoted to technical explanation of these units. Here, however, we will concentrate on the practical aspects for the construction of a 70 cm SSB transverter. For the receive converter we have used the VK2ZIM converter modified for 28 MHz output and fixed oscillator injection.

The oscillator generates a crystal controlled frequency of 404 MHz. The 67.333 MHz crystal is firstly tripled, then doubled in the output of T303 and further amplified by T304 to a level of around 10 mW. Two outputs are provided. Pt 303 gives about 20 per cent of the total output power and is used to drive the receiver converter. BF199s were used throughout instead of the BF224s specified as these were easier to obtain and cost less than 30 cents at present.

The transmit mixer is again relatively simple. The SSB input (we used 28 MHz) is wed to Pt 402 via the input bandpass filter (Fig. 1), whilst the oscillator is fed to Pt 401. 2N5245 FETs were used in one author's rig while the other used a modification suggested by Peter VK3ZPA consisting of BF180s instead of FETs (Fig. 3). Both work equally as well. Transistors T405, T406 and T407 amplify the 432 MHz signal to approximately 25 mW. Although more power output was claimed in the original article we could not obtain this, nor do we know of anyone who has. This is more than enough power for a 5 x 9 contact over a mile or so. Distances in excess of twenty miles have been worked from the output of the DJ4LB 004 board.

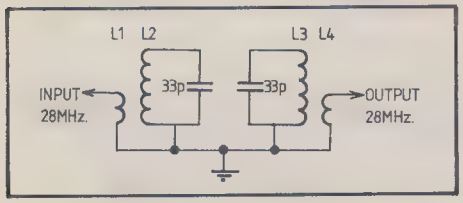

FIG. 1. 28 MHz Bandpass Filter.
L1, L4, 5T, 28g. L2, L3, 16T, 24g. Wound on neosid former inside double can F-29 slugs.

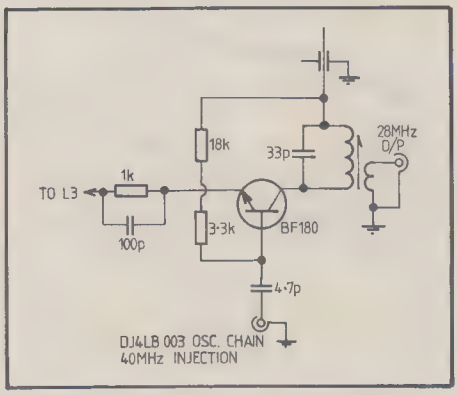

FIG. 2. Modification to VK2ZIM ATV Converter.
28 MHz output wound on neosid former 16Ts 24g. 33 pF, with 5Ts for coupling link.

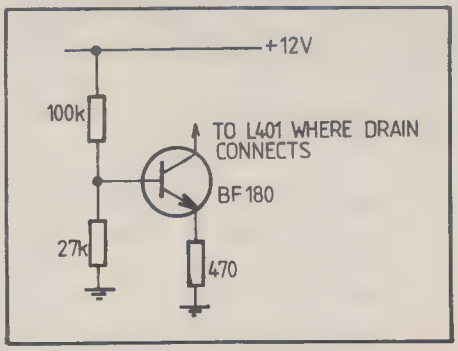

FIG. 3. Alternative to FET Mixer.
100k mounted under board to 12 volt rail at connection of R415 and C429. 27k mounted in place of R401 and R404. 470-2 in place of R402 and R403.

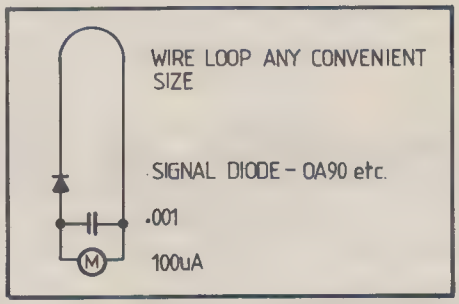

FIG. 4(a). RF Indicator.

The VK2ZIM ATV converter has proved to be very popular over the years. We have re-printed it here as originally featured for those who may want an ATV converter. The modifications are shown in Fig. 2. It is suggested that the converter be made of PC board. If the Neosid 28 MHz output transformer is mounted on top of the box scrape the copper away from under it. The old oscillator will no longer be required. The 1k resistors shown in the collectors of the first two stages should be connected to 1,000 pF feed-through capacitors before passing through the box to the 12 volt supply and not as shown with them mounted vertically through the top. Remember, KEEP THOSE LEADS AS SHORT AS POSSIBLE.

ALIGNMENT OF THE OSCILLATOR

Most dip oscillators will tune up to 200 MHz and can be used as indicators for the alignment of the 67.333 MHz and 202 MHz stages. Thereafter use a simple RF indicator (Fig. 4), or better still make yourself a wave-meter using a miniature variable capacitor and hairpin loop (Fig. 4(a)). This can be calibrated, after the completion of the oscillator chain, for 404 MHz at least. It is suggested that the final adjustments to both units be done using a wave-meter. Couple your dipper to L301 and tune the slug for an indication of RF at 67 MHz. Tune for maximum then back off a little to ensure reliable starting. Now

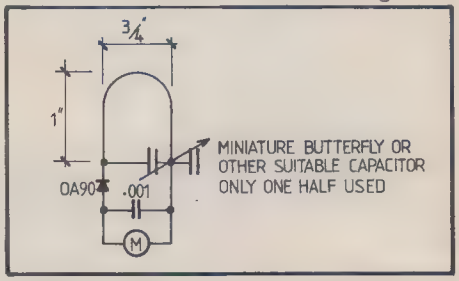

FIG. 4(b). Wave Meter L1 Hairpin Loop 16g. tinned.
* Dimensions of L will depend on C.

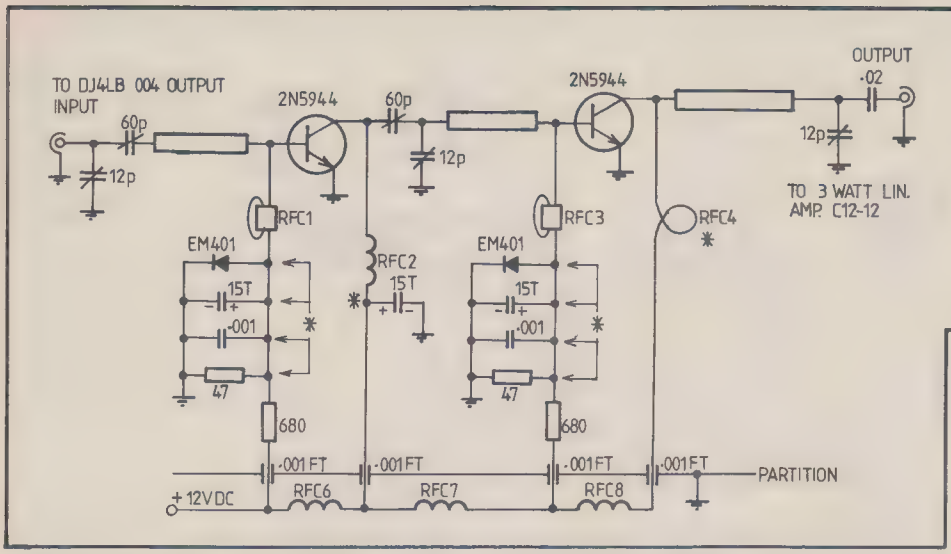

FIG. 5. Low Power Linear Amplifier.

RFC 1, 3, 2 turns 26g. approximately through ferrite head.
RFC 3, 6, 7 and 8, 170 mm 24g. approximately wound 5/32 diam.
RFC 4, 1 turn 22g. tinned wire 3/16 in. diam.
.001 feed throughs are mounted on 1 in. high PC board partition soldered length of board.
* These components soldered on etched landing square.

couple to L302 looking for 202 MHz and tune C306 for maximum. Likewise couple to L303 and this time tune for a dip. At this stage check the oscillator by removing the crystal. The output should drop to zero and reappear when the crystal is replaced. Terminate the output of the oscillator in a dummy load. A small resistor of 50 ohms will suffice. The next stage is to check for the 404 MHz energy. Most of us will have nothing for this frequency except our little RF indicator (Fig. 4(a)). Normally, all that should appear at L304 will be 404 MHz. Tune C316 for maximum. Couple to L306 and tune C318 for maximum. Tune C321 and C322 for best indication at L306. These adjustments will have to be refined later when the receiving converter is working and the S-meter can be used to indicate best signal.

At this point it is worth noting the wavemeter. It is likely that if you have a dipper covering the 200 MHz region you will have a better than average chance of bringing the oscillator out on 404 MHz. Now you have a signal source with which to calibrate a wave-meter. The hairpin loop will depend on the value of C and it may need trimming. Try and trim it so that an indication is obtained with the capacitor almost fully in mesh. This will mean that the 432 MHz signal must appear at fractionally less capacitance. The one we use is made from a miniature butterfly capacitor and a loop of about 16 gauge wire to the dimensions given in Fig. 4(b). This was mounted in a small piece of PC board and a knob fitted to the shaft. The difference between the 404 MHz point and the 432 MHz point was only about 1 mm in our case. There are quite a lot of ATV operators about these days and I'm sure one of them wouldn't mind you waving your wave-meter across his final to find 426.25 MHz.

If the receive converter has been made, connect a piece of coax from Pt 303 to the injection point of the mixer. Connect the output from the 28 MHz coil to your tunable IF and switch on. An increase in receive noise should be heard. Tune the 28 MHz coil for maximum noise. Try tuning C1, C2 and C3 for a noise increase as well. A 432 MHz signal is needed to make the final adjustments, in which case simply tune all the trimmers in the receive converter and oscillator chain for maximum as indicated on the receiver S-meter.

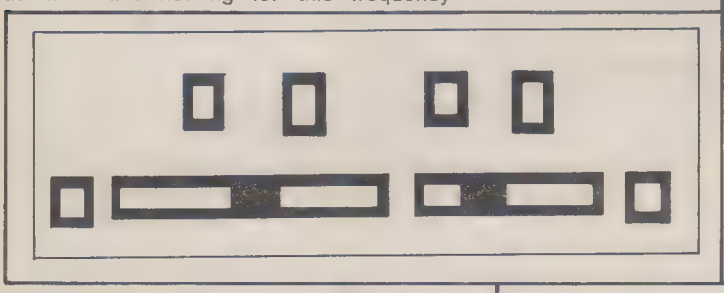

FIG. 6. Low Power Linear PCB.

FIG. 8: 3W Linear Component Layout.

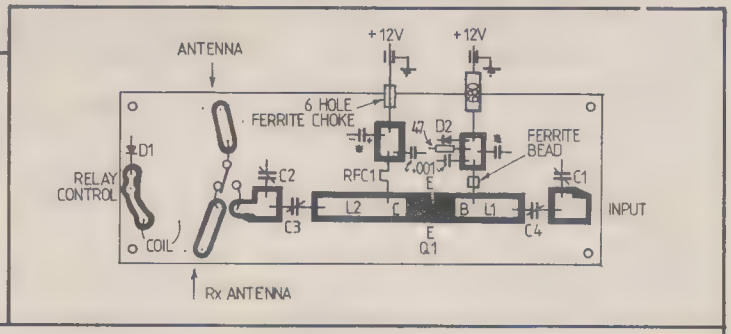

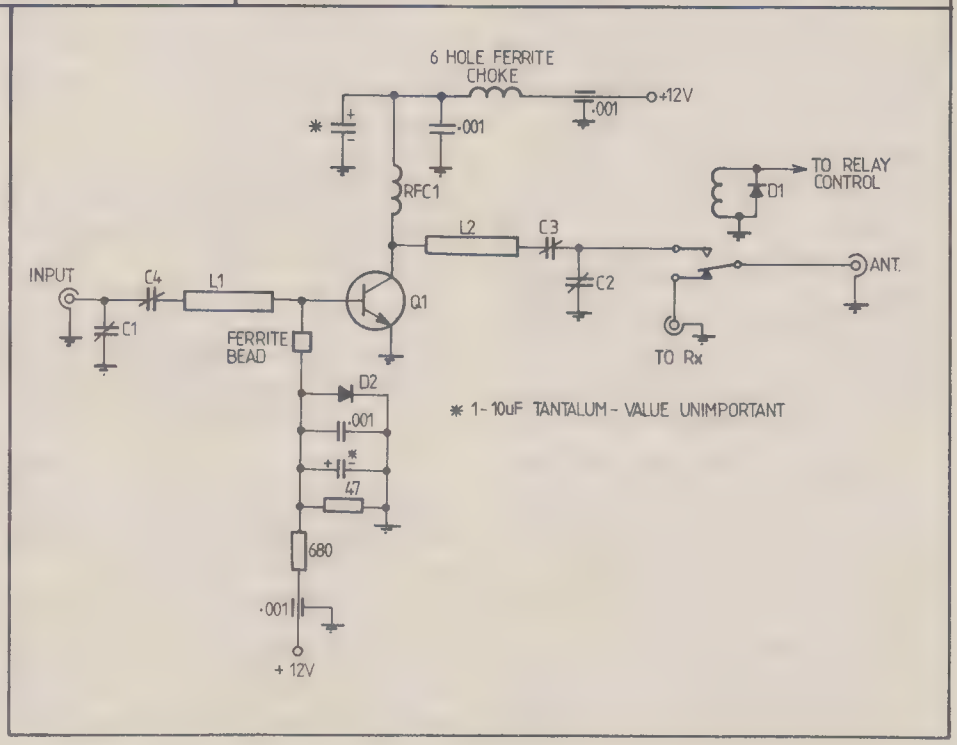

FIG. 7: 3W Amplifier CRT (see reference next page).

ALIGNMENT OF THE TRANSMIT MIXER

Connect the local oscillator to Pt 401 and your 28 MHz input to Pt 402 via your *bandpass filter.* Remember that this board is broad-banded for TV so any nasties from your prime mover *WILL* appear in the output! The output Pt 405 should be connected to a dummy load and some sort of indicating device if possible, although the output will only be small. If you haven't made your wave-meter yet then you will have to rely on the simple RF indicator. Couple your indicating device to L401. Now you can do one of two things. Either tune trimmers C404, C405 for the 404 MHz oscillator in which case you will know that the 432 MHz SSB signal must peak at a value of capacitance less than for 404 MHz, or apply a small amount of 28 MHz carrier, peaking the trimmers for maximum. Switch to the SSB position and the output should drop to zero until you speak. On the FT101B used, the mike and carrier controls were set to the first indicator mark or about the seven o'clock position for full output. So as you can see only a very small amount of drive is needed. Residual carrier may also become evident at these low levels. With 432 MHz output from the mixer tune the following stages for maxium output. Output from this board feeding the linears described will produce at least 3 watts.

THE LINEAR AMPLIFIER

This linear amplifier is quite straightforward. No problems should be encountered in its construction. It will produce at least half a watt when driven direct with the DJ4LB 004 output. Alignment procedure can be followed from the 3 watt linear.

3 WATT LINEAR

There are several proven linear amplifier designs that will suit this transverter. One was detailed in VHF Communications some time ago, specifically designed for the DJ4LB series of TV modules. Three such units have been constructed successfully by the authors. In fact the transverter pictured uses such a linear. The construction techniques involved are complicated by elaborate biasing and a DC path to the antenna.

Because of this it was decided to develop a linear of less complicated design. To date two units have been constructed, one for SSB and the other for 440 MHz ATV. Both linears performed well. In ATV use, colour signals were handled with no noticeable degradation of picture quality (a good test for a linear).

The circuit is conventional, using diode bias and is similar to the linear mentioned earlier. The diode .biasing does not prevent thermal effects to any great extent. However, at the power levels involved and with generous heat sinking this is not a problem.

The board layout for this linear is designed to use a PCB type coax changeover relay. However the relay is quite expensive (available from Dick Smith Electronics). If another type of relay is used (coax relays only please) then the board layout would have to be altered to suit. This linear is capable of between 4 and 6 watts output.

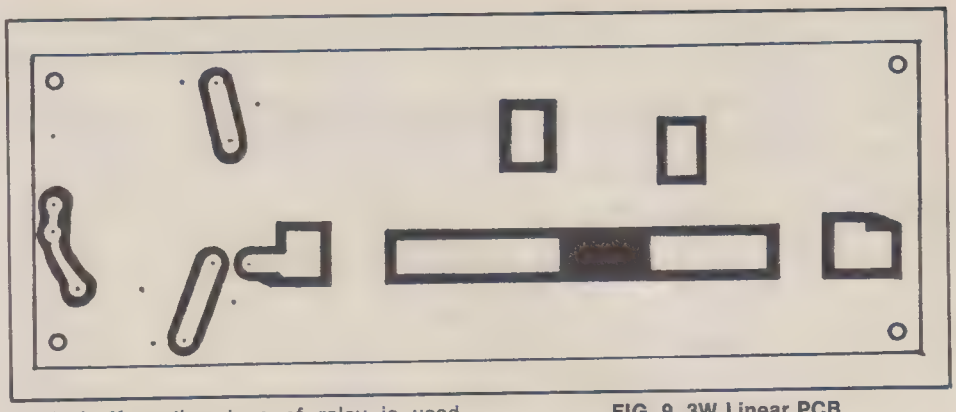

FIG. 9. 3W Linear PCB.

Aligment is simple. Use the absorption wave-meter and a dummy load. Peak all trimmers for maximum output. Re-tweaking the trimmers using different settings will then provide the best matching.

ALTERNATIVE RECEIVE CONVERTER

Elsewhere in this article mention is made of the VK2ZIM converter and the modifications necessary for SSB use. Another converter is available ready made. That is the ATV converter manufactured by Microlink. Les VK3ZBJ suggests that the wide band output balun be replaced by a 28 MHz coil.

The authors used a converter similar to that manufactured by Microlink. The free running oscillator FET was removed and drive from the crystal-controlled chain fed by coax to the point where the gate had been connected.

Peaking the trimmers and the mixer output coil is the only alignment required.

The addition of a 28 MHz IF amplifier seemed worthwhile. By careful arrangement of the circuit the IF amplifier can be made to fit above the input section of the Microlink board. The circuit of the receive converter includes the pre-amp.

Our thanks go to Microlink Pty. Ltd., 12 Rosella Street, Frankston 3199, and also Ross French VK3ZFU and the many others who made this unit before us, proving that it is a good, simple, workable transceiver.

APPENDIX 1
"ELECTRONICS AUSTRALIA" CONVERTER FOR AMATEUR TV

The following is based on an article published in Electronics Australia, January, 1972.

The converter design shown was originally described by Ian McKenzie VK2ZIM in the monthly newsletter published by the VHF and TV Group, Wireless Institute of Australia, NSW Division.

As may be seen, the converter consists of two RF amplifier stages, a mixer stage and a free-running local oscillator, all using BF180 or similar UHF bipolar transistors. The RF stages use the groundbase configuration, with signal tuning performed by trough lines. Output from the second RF stage is fed into the emitter circuit of the mixer, while the local oscillator signal is fed into the base. The IF output circuit in the mixer collector circuit and the local oscillator frequency may be adjusted so that the converter output appears on any suitable unused channel. The output of the converter connects directly to the aerial terminals of the TV receiver, via a suitable balun if necessary.

REFERENCE FIGURE 7

Q1—CTC C12-12* or 2N5946.
* Used if following low power linear.
C1—4.5-20 pF trimmer.
C2—As C1.
C3—70 pF mica compression trimmer.
C4—As C3.
Capacitors * tantalum 1-10 uF value unimportant.
Change-over relay CX120P to TSU Electric Co. available from Dick Smith Electronics.
RFC 1—1 turn 16 B & S tinned copper wire.
D1—IN4001 or similar.
D2—As D1.
Single sided board. All components on copper side mounted 3 mm above grond place (heat sink) shown full size.

Although quite suitable for TV reception, the stability of the free-running local oscillator would probably not be good enough for reception of AM or FM phone signals. However a crystal-locked oscillator chain could be substituted if desired.

The physical construction of the converter should be fairly clear from Fig. 11. Each trough-line consists of a 2½ in. length of 1/8 in. brass brazing rod, centred in the 1 in. x 1 in. troughs formed by the partitions in the brass or tinplate box. Suitable trimmers for the tuning would be the Philips type COO4-AA, or the similar types of COO4-BA, COO4-CA, COO4-JA, all of which are available in 0.8-6.0 pF.

Note that the trough partitions are notched to accommodate TR1 and TR2.

APPENDIX 2
FURTHER DETAILS OF THE DJ4LB ATV TRANSMITTER

The following information is based on the original article which was published in VHF Communications.

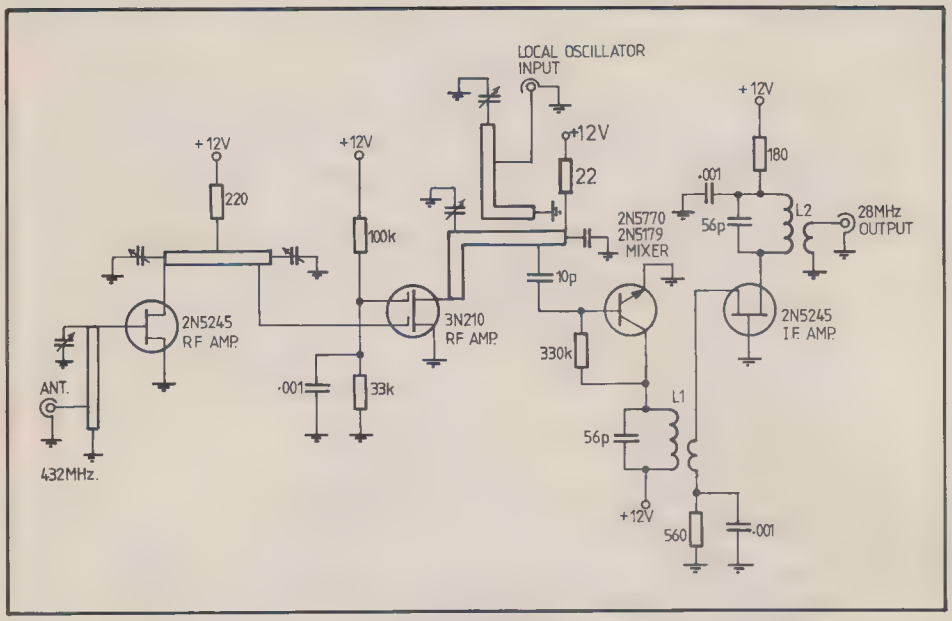

FIG. 11. Converter Layout.

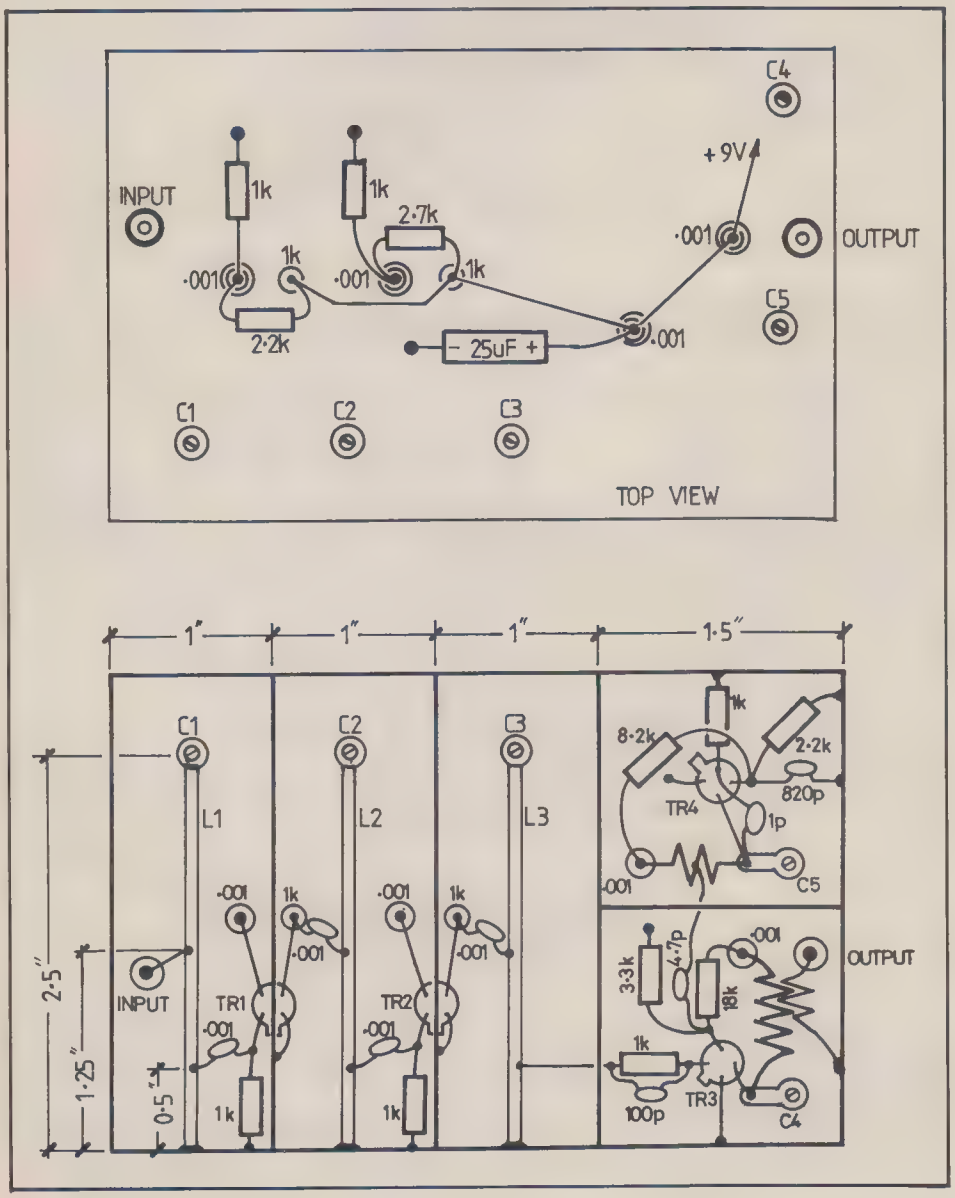

FIGURE 10 (left): Converter for Amateur TV.

LOCAL OSCILLATOR MODULE

Module DJ4LB 003 generates a crystal-controlled, local oscillator frequency of 473.15 MHz for the transmit mixer DJ4LB 004. A connection is also provided for a receive converter (transceive operation).

As can be seen in the block diagram (Fig. 13), the crystal-controlled frequency of 67.333 MHz is multiplied by six. The bandpass filters at the output of the tripler and doubler stages efficiently suppress spurious signals which are always generated during the frequency multiplying process. The subsequent amplifier stage provides an output power of approximately 10 mW to 15 mW and ensures an isolation between the output socket and the bandpass filter.

CIRCUIT DETAILS

Fig. 14 gives the circuit diagram of the local oscillator module. Transistor T301 operates as crystal oscillator and the resonant circuit comprising L301/C303 is tuned to the overtone frequency of the crystal (in our case 67.333 MHz for SSB or 78.8 MHz for ATV). The subsequent transistor T302 generates strong harmonics when operating in Class C and the bandpass filter comprising inductances L302 and L303 filter out the required frequency of three times that of the crystal oscillator frequency. This signal is now fed to the doubler stage equipped with transistor T303 which operates in class AB and therefore generates mainly even harmonics. The bandpass filter comprising inductances L304 and L305 filters out the doubled frequency which is then six times the original crystal-controlled frequency. This signal is then fed to the amplifier stage comprising transistor T304. The output circuit of this stage is in the form of a Pi-filter which transforms the output signal to an impedance of 60 ohms at Pt 304. Connection Pt 303 is an additional RF output having approximately 20 per cent of the output power for driving a receive converter. The crystal-controlled oscillator (T301) and the subsequent tripler stage (T302) are fed via transistor T305 (and D301) with a stabilized voltage of approximately 8.5V so that no frequency variations are caused by fluctuations of the operating points.

MECHANICAL CONSTRUCTION

The described local oscillator module DJ4LB 003 is accommodated on a single-coated PC board having the dimensions 135 mm x 50 mm. Fig. 5 shows this PC board and the associated component location plan. The only soldered connection to be made on the component side of the board is the soldering of the ceramic capacitor C319 to the coil tap on inductance L305. It is advisable to also mount this module in a TEKO-box 4B in order to

screen it against UHF injection from the transmitter.

SPECIAL COMPONENTS

D301: BZY85/C9V1 or similar 9.1V zener diode.

L301: 4.75 turns of 0.8 mm diameter (20 AWG) silver-plated copper wire wound on a 5 mm diameter coil former with VHF core (brown). Coil length approximately 7 mm, facing the collector side of the board.

L302, L306: 1.75 turns of 0.8 mm diameter (20 AWG) silver-plated copper wire self-supporting. L302, L303: 5 mm inner diameter, approximately 3 mm spacing between coil and board. L304, L305: 4 mm inner diameter, 1 to 2 mm spacing between coil and board. L306: 5 mm inner diameter, spaced 2 mm from the board. The direction of the coil and coil length are given by the holes in the PC board. Coil tap for L305: 0.75 turns from the ground end.

Ch. 301, Ch. 302, Ch. 303, Ch. 306: 3.5 turns of 0.4 mm diameter (26 AWG) enamelled copper wire placed through a ferrite bead of 3.5 mm diameter, 5 mm long (Philips).

Ch. 304, Ch. 305: Wideband ferrite choke 6 mm diameter, 10 mm long. Z = 800 ohms (Philips).

Ch. 307: 3 turns of 0.4 mm diameter (26 AWG) enamelled copper wire wound on a 3 mm former, length approximately 3 mm, self-supporting.

Q301: 78.858 MHz, HC-25/U with holder (vertical) or HC-6/U without holder.

C306, C311, C322: 3-12 pF ceramic disc trimmer, 10 mm diameter.

C316, C318, C321: 2-6 pF ceramic disc capacitor, 10 mm diameter.

C309: 3.3 uF/16V tantalium drop-type electrolytic.

C301: 47 pF
C303: 33 pF
C305: 10 pF
C313: 2.7 pF
ceramic tubular capacitor for 10 mm spacing.

All other capacitors: Ceramic dis capacitors, spacing 5 mm.

All spacing of 12.5 mm is available for the resistors.

Modifications for other output frequencies: 404 MHz: Q301: 67.333 MHz; C303: 47 pF; 432.... MHz: Q301: 72.... MHz; C303: 39 pF.

Modifications for higher output power levels:
T304: BF223 (AEG-Telefunken); R310: 68 ohms.

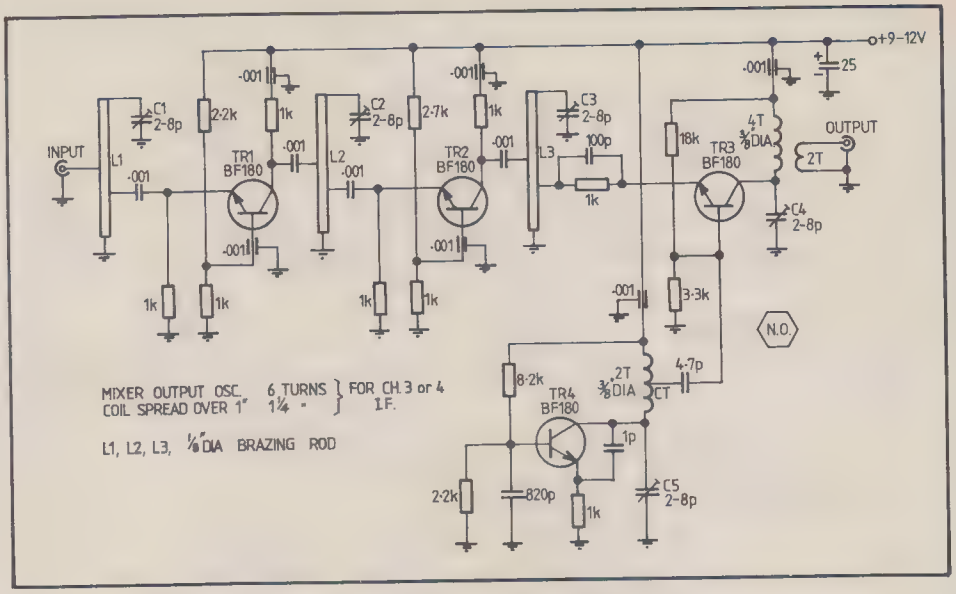

FIG. 12. The Circuit for the Amateur TV Converter.

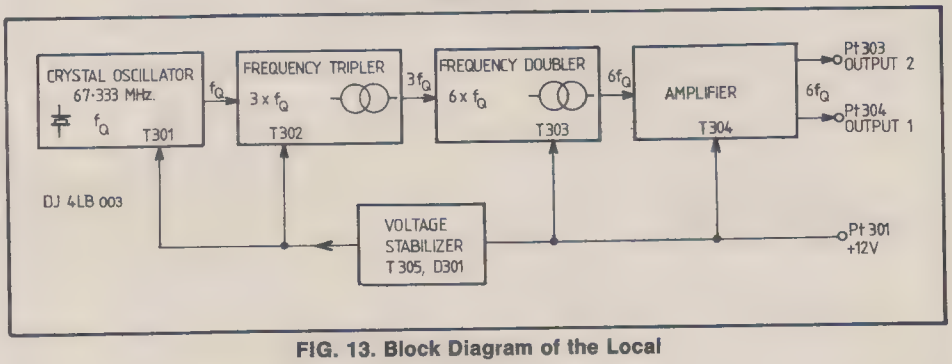

FIG. 13. Block Diagram of the Local Oscillator.

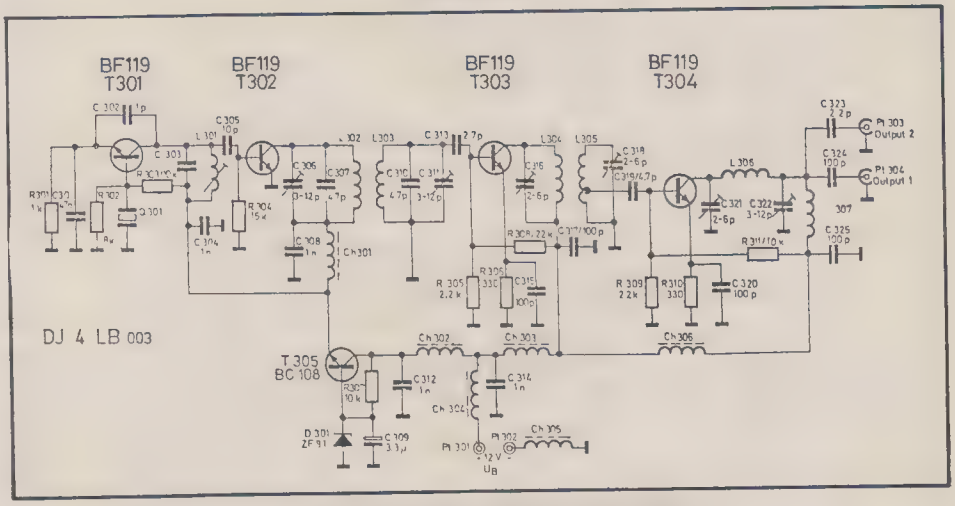

FIG. 14. Circuit Diagram of the Local Oscillator Module DJ4LB 003 using alternative Transistors.

ALIGNMENT AND TESTING OF MODULE BJ4LB 003

A reflectometer can be used for indicating the relative output power during the alignment process. The stripline reflectometer DK2VF 002 is suitable for this. It should be connected between the RF-output 1 (Pt 304) of module DJ4LB 003 and a 60 ohm terminating resistor. However, it is advisable to use a RF voltmeter (multimeter with a diode input) or a tube voltmeter (VTVM with RF-probe) for the preliminary alignment steps.

The RF-voltmeter is firstly loosely coupled to the resonant circuit of the crystal oscillator and the core of inductance L301 should be adjusted until RF is indicated. The oscillator will now oscillate at the correct frequency since the feedback conditions do not favour any spurious oscillation. This is followed by aligning the resonant circuits of the subsequent stages

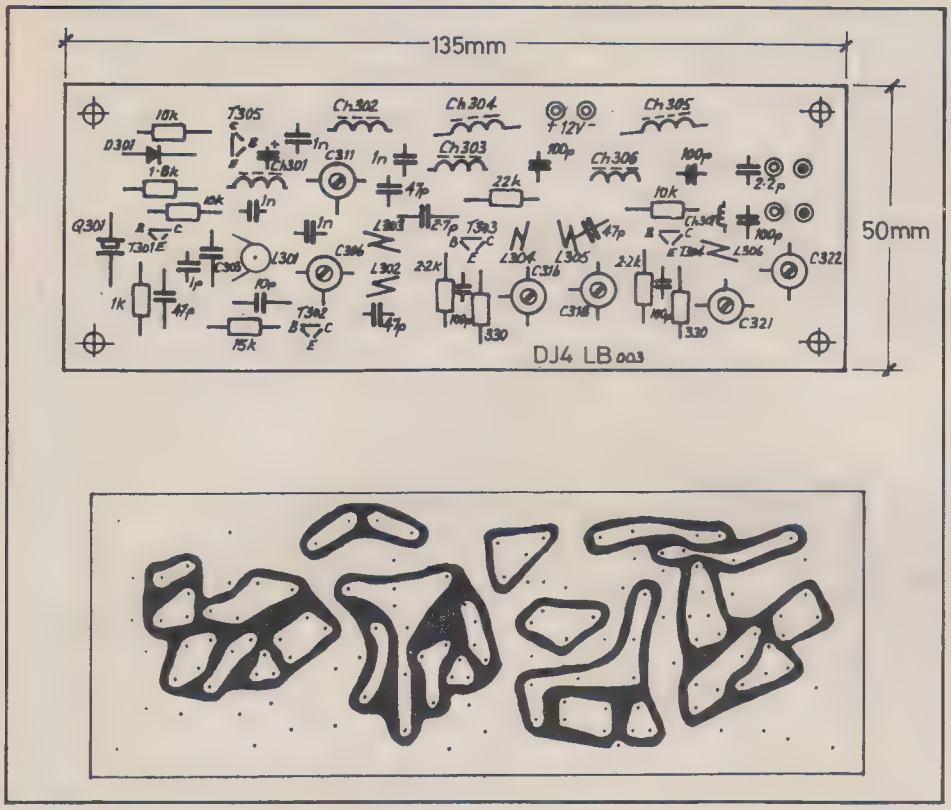

FIG. 15. Printed Circuit Board and Component Location Plan of the Local Oscillator Module.

to resonance by adjusting the variable capacitors. This can also be checked by loosely coupling the RF-voltmeter to the resonant circuit in question.

The described preliminary alignment is repeated until the reflectometer at the output indicates a reading. All resonant circuits are then aligned for maximum reading on the reflectometer and the alignment is repeated until no increase of the output power is possible. For reasons of stability, the core of inductance L301 should then be slightly extracted until the output power is reduced slightly.

The module is checked by removing the crystal from the holder and ensuring that the circuit no longer provides any RF voltage. In addition to this, the 60 ohm terminating resistor should be removed in order to obtain any required mis-match conditions with the aid of various unterminated coaxial cables. If no spurious oscillations occur, the module will be ready to operate even when the output termination is not exactly obtained. Any tendency to oscillation with the version with a higher output power can be neutralized by increasing the coupling and inductances L304 and L305 to another (decreasing the distance between them).

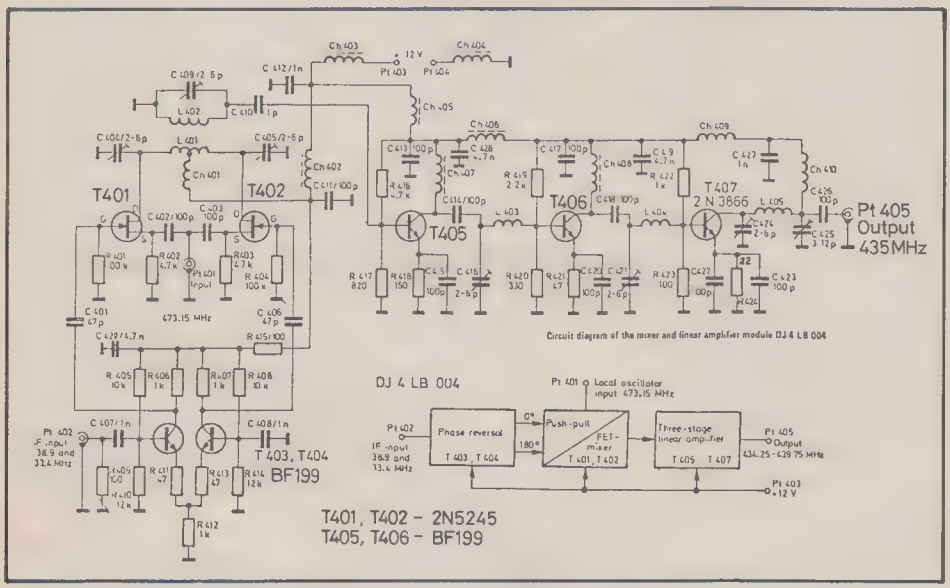

FIG. 16. Block Diagram of the Mixer and Linear Amplifier Module DJ4LB 004.

TRANSMIT MIXER AND AMPLIFIER MODULE DJ4BL 004

As can be seen in the block diagram given in Fig. 16, module DJ4LB 004 is provided with the local oscillator frequency of 473.15 MHz and the combined video and sound-intermediate frequency of 38.9 MHz and 33.4 MHz. The required output frequency is obtained by conversion of the frequency differences 434.25 and 439.75 MHz which is amplified in a three-stage linear amplifier to approximately 100 mW.

A push-pull mixer stage equipped with field effect transistors is used which virtually completely suppresses the push-pull local oscillator signal. This is especially important due to the relatively small frequency spacing between the local oscillator and required output frequency.

The FET push-pull mixer is driven via a differential amplifier which has been dimensioned as a phase-reversal stage so that two equal-amplitude IF voltages are formed that are phase-shifted by 180° to another. Since this phase-reversal stage and the input circuit for the local oscillator frequency do not contain any resonant circuits, the module DJ4LB 004 can be used for mixing other frequency combinations without modification, such as 28 to 30 MHz and 404 MHz to 432-434 MHz.

Fig. 17 gives the circuit diagram of the mixer and linear amplifier module.

PHASE-REVERSAL STAGE

Resistor R409 forms, together with the input impedance of the differential amplifier (T403, T404) the 60 ohm termination for the IF-signal at connection Pt 402. Since the IF input level of approximately 0.6V (peak-to-peak) is already sufficient for driving the mixer, the voltage gain of the differential amplifier is adjusted to a value of approximately 1.5 by the emitter resistors R411 and 413. This feedback increases the linearity of the amplifier and reduces the influence of component tolerances on the balance and driveability of the circuit. Two virtually equal-amplitude IF voltages of maximum 1V (peak-to-peak) each is available at the collectors of the two transistors which are phase-shifted by 180° to another.

PUSH-PULL FET MIXER

The two phase-shifted IF-signals are fed via capacitors C401 and C406 to the high impedance gate connections of the field effect transistors T401 and T402. The parallel-connection of the source connections represents the low-impedance termination for the local oscillator voltage. The

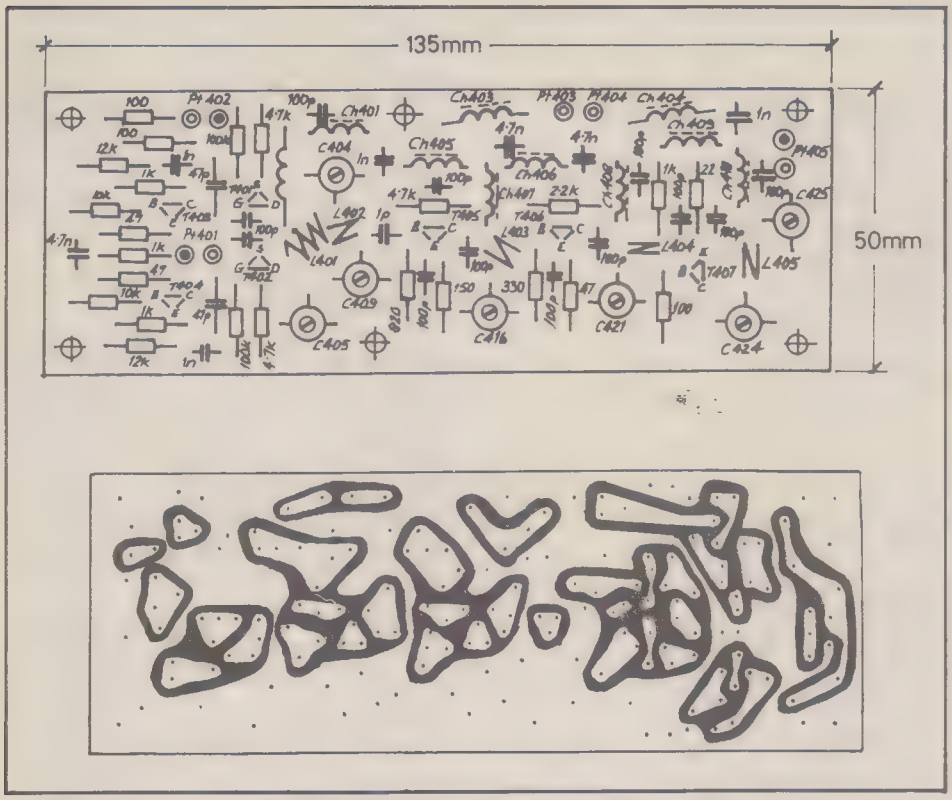

FIG. 17. Printed Circuit Board and Component Locations of the Mixer and Linear Amplifier Module.

output circuit of the mixer comprises the centre-tapped inductance L401 and the series connection of the trimmer capacitors C404 and C405. The inductive coupling to the resonant circuit L402/C409 forms a bandpass filter which, due to its relatively high Q (low damping) mainly determines the passband characteristics of this module in the 70 cm band.

LINEAR AMPLIFIER

The linear implifier consists of three amplifier stages equipped with transistors T405, T406 and T407. The virtually constant DC operating points of all transistors (class A) result in a good linearity. It is also ensured that fluctuating signal amplitudes will not noticeably detune the resonant circuits of the amplifier due to the transistor capacitances that are dependent on the operating points. A special UHF filtering also has a good effect on stable operation of the amplifier. The additional higher-value bypass capacitors C419 and C428 ensure that no parasitic oscillations can occur in the shortwave region. The Pi-filter at the output of the amplifier comprising C424, L405 and C425 allows an exact power-matching to a 60 ohm terminating resistor.

LINEARITY

A low-distortion conversion of the complex ATV signal from the intermediate frequency level to UHF and its subsequent amplification places high demands on the linearity of all stages in the signal path. Tests have indicated a virtually linear relationship between the IF input voltage and the UHF output power which was measured on a prototype of the module DJ4LB 004.

BANDWIDTH

The ATV signal requires a bandwidth of approximately 6.5 MHz which results from the frequency spacing between the video and sound carriers (5.5 MHz) plus the approximate 1 MHz of the residual lower sideband (video modulation spectrum).

CONSTRUCTION OF DJ4BL 004

The described module DJ4LB 004 is accommodated on a single-coated PC board having the dimensions 135 mm x 50 mm (Fig. 23), which has been designated DJ4LB 004. Fig. 24 shows a photograph of the author's prototype. The higher TEKO-box 4B should also be used for this module so that the resonant circuits are not detuned on mounting the cover. Due to the use of only single-coated PC boards, stable operation of this UHF module is only possible when the board is provided with metal spacing bushings of approximately 5 mm in length between all six mounting positions and the base of the TEKO-box, or similar metal surface. The PC board should be tinned where the spacer bushings touch the PC board in order to provide a good ground connection since the PC board is provided with a protective coating.

SPECIAL COMPONENTS

T401, T402: 2N5245.
T403-T405: BF224, BF173, DF199.
T406: BF223 (AEG-Telefunken), BF199.
T407: 2N3866.

All inductances are made of 0 8 mm diameter (20 AWG) silver-plated copper wire as given, self-supporting.

L401: 3.75 turns, 4 mm inner diameter, spaced 2-3 mm from the board, centre tap.
L402: 1.75 turns, inner diameter and spacing a L401.
L403: 0.75 turns, U-shaped, spacing between the ends of the wire: 5 mm. Top of the "U": approximately 10 mm above the board.
L404: 1.75 turns, inner diameter 4 mm, spacing to board approximately 1 mm.
L405: 1.75 turns, inner diameter 5 mm, spacing to board 2-3 mm.
Ch. 401, Ch. 409: Approximately 17 cm of 0.4 mm diameter (26 AWG) enamelled copper wire, self-supporting, 3 mm inner diameter, coil length 10 mm.
Ch. 402, Ch. 405, Ch. 406: 3.5 turns of 0.4 mm diameter (26 AWG) enamelled copper wire pulled through a ferrite head (3 mm diameter, 5 mm length).
Ch. 407, Ch. 408: 6.5 turns, otherwise as Ch. 402.
Ch. 403, Ch. 404: Wideband ferrite choke Z = 800 ohms, 2.5 turns, 6 mm diameter, 10 mm long (Philips).
Ch. 410: 3 turns of 0.4 mm diameter (26 AWG) enamelled copper wire, self-supporting, 3 mm inner diameter, coil length approximately 3 mm.
C404, C405, C409, C416, C421, C424: 2-6 pF ceramic disc trimmer, 10 mm diameter.
C425: 3-12 pF ceramic disc trimmer, 10 mm diameter.
C401, C406: 47 pF ceramic tubular capacitor for 10 mm spacing.
All other capacitors: Ceramic disc types for 5 mm spacing.
A spacing of 12.5 mm is available for all resistors.

ALIGNMENT OF MODULE DJ4BL 004

The local oscillator frequency is now connected to connection Pt 401 and the video IF signal to input Pt 402. A reflectometer for indicating the output power can be connected between connection Pt 405 and the 60 ohm terminating resistor as has been already described for the alignment of module DJ4LB 003. The 435 MHz resonant circuits of the amplifier are aligned to resonance with the aid of a RF voltmeter until the reflectometer indicates RF-power at the output. The IF input power is now increased in steps until the UHF output voltage does not increase noticeably in spite of the adjustment of the resonant circuits. The alignment of the Pi-filter at the output is made for maximum output power by alternate adjustment of the two appropriate trimmer capacitors.

On touching the various turns of inductance L401 (e.g. with a screwdriver) it is possible to easily find the electrical centre point where the lowest reduction of the output power is obtained. This electrical point can be shifted to the connection point of choke Ch. 401 by appropriate adjustment of trimmers C404 and C405. ■

NEW QUALITY ROTATORS WITH WORLD MAP CENTRED ON AUSTRALIA!

DAIWA

* Safe to operate with low voltage 24VAC
* High brake torque with the newly designed brake mechanism.
* Specially designed reduction gear train for minimal power loss and dependable long-life operation.
* The mast clamp guide (patent pending) eliminates any alignment problems.
* Rotator is weather sealed and factory lubricated. Housing is die-cast aluminium with melamine - resin coating to prevent oxidisation.

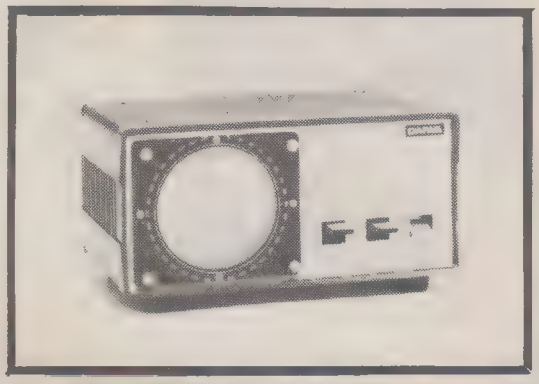

THE "R" TYPE CONTROLLER

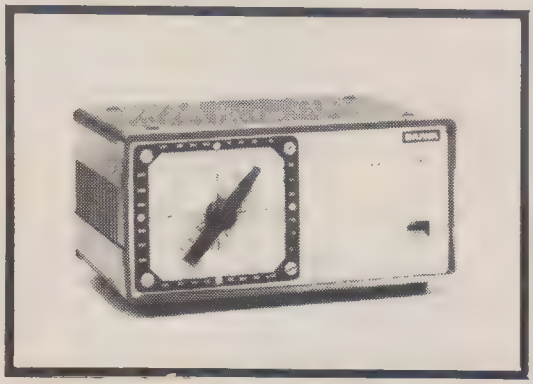

THE "X" TYPE CONTROLLER

Typical operating characteristics:

	DR7500 (medium duty)	DR7600 (heavy duty)
Power consumption	40VA	40VA
Motor	24V split phase	24V split phase
Rotation time (approx)	50 sec	64 sec
Rotating torque	500kg/cm	600kg/cm
Braking Torque	2000kg/cm	4000kg/cm
Vertical load	200 kg	200 kg
Weight	4.5 kg	4.6 kg
Cable	6 core	6 core

Prices: DAIWA

	Controller	Price
DR7500R Medium duty	"R"	189.00
DR7500X Medium duty	"X"	172.00
DR7600R Heavy duty	"R"	269.00
DR7600X Heavy duty	"X"	239.00

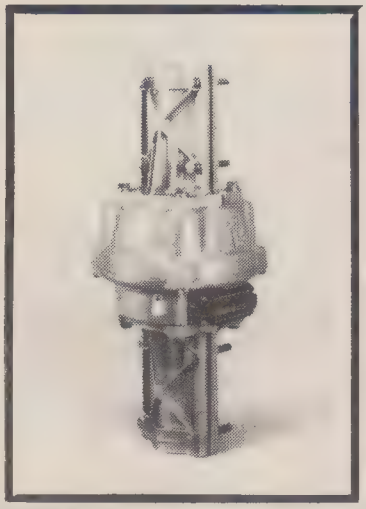

MEDIUM DUTY ROTATOR

Available at your VICOM DEALER

VICOM

CW ELECTRONICS

FLESHER CORP.

TR128
RTTY
REGENERATIVE
SPEED CONVERTOR

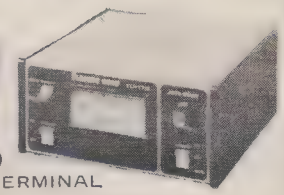

TU-170
RTTY TERMINAL
UNIT WITH LOOP
SUPPLY ETC.

MACROTRONICS, inc.

AMATEUR RADIO/MINI COMPUTER INTERFACES WITH SOFTWARE

MACTRONICS M650 DELUX RTTY AND MORSE SYSTEMS

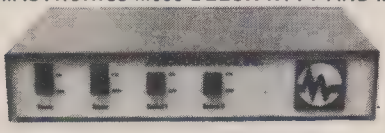

for
- Apple
- TRS 80
- Scorcerer
- Commodore

NEW AGENT IN SOUTH AUSTRALIA
GOLF COMMUNICATIONS, WHYALLA
(086) 45 0208

VICOM

ICOM	Transceivers and accessories
DIAWA	Antenna Tuners, Rotators, VSWR/Power Meters, Co-Axial Switches, Low Pass Filters, Voice Compressors and Processors
LEADER	Oscilloscopes, Signal Generators, Grid Dip Meters, Regulated Power Supplies, Wow and Flutter Meters, Antenna Couplers, Power Meters
ELBEX	Video Camera
JOSTY KITS	Amplifiers, Tuners, Generators, Hi-Fi, Relays, Timers, Decoders, etc.
	VHF and Aircraft Scanning and Crystal Controlled Receivers, Commercial and Industrial Test and Communications Equipment.

OFFICIAL QUEENSLAND WHOLESALE DISTRIBUTOR.

BAILS:

YAESU	Transceivers, Receivers and accessories, the fabulous FT 1207R Hand Held, Monitorscopes, Antenna Tuners, Mobile Antennas, Hand Books, RTTY and Morse Readers.
EMOTATOR	Rotators, Mast Clamps, Thrust Bearings etc. CW keys and much much more . . .
GFS IMPORTS	MFJ Antenna Tuners, SWR/Power Meters, Filters, Speech Processors and Keyers.
KENWOOD	Transceivers, Receivers, Dummy loads, Antennas, Headphones, Power Supplies, clocks etc.

ATN

ATN	Antennas, HF, VHF, UHF Australian Made at the right price
DSI	Frequency Counters and accessories
MIRAGE	Linear Amplifiers and SWR/Peak reading Watt Meters.

OFFICIAL QUEENSLAND DISTRIBUTOR.

EMTRONICS	LUNAR-HF and VHF linears DATONG Morse Tutors DENTRON Linears and Tuners BEARCAT Scanning receivers.

OFFICIAL QUEENSLAND DISTRIBUTOR.

SCALAR	Multi-band Vertical and Mobile Antennas
HYGAIN	Antennas and Baluns, TH3Jnr and TH6DXX now in stock
WELLER	Soldering irons
FLUKE	Multi-meters

Electronic toys and games, Metal detectors, Tools, Batteries, Cable, Calculators, Morse Tapes, Text books, Log books . . . books, books, books . . . Second hand gear, etc. etc. etc . . .

HAMINEX COMMODORE	Personal Home and Small Business Mini-computers (PET 8k, CBM 16k and 32k), Twin Intelligent Floppy Disc Drives, Traction and Pressure Fed Printers, Software, Service, Books, Cassettes, Discs, etc.
DATASOFT	Coming soon — Well over 100 programmes for wide range of popular mini-computers

AND MORE . . .

**Dealer enquiries welcome*

CW ELECTRONICS

CNR. MARSHALL RD & CHAMBERLAND ST.,
TARRAGINDI — BRISBANE PH (07) 48 6601
PO BOX 274, SUNNYBANK, QLD. 4109
AH: BRIAN (07) 341 4767

ATN ANTENNAS

be on top of the pile

ALL ANTENNAS LISTED INCLUDE BALUN FOR SYMMETRICAL AND CLEAN PATTERN, AND USE "N" CONNE FOR 70 cm UP.

	Gain dbi	Boom
15/11/10 mx		
ATN 20-30-1 rotary dipole		
11/10 mx model		
ATN 28-30-3	9.7	3.5M
ATN 28-30-5	12.0	6.5M
ATN 28-30-6	13.2	8.3M
6 mx		
ATN 51-53-5	11.9	3.5M
ATN 51-53-8	14.2	5.5M
ATN 51-53-11	16.2	9.0M
2 mx		
ATN 144-148-8	12.7	2.2M
ATN 144-148-11	14.6	3.8M
ATN 144-148-16	17.0	6.3M
Radio Astronomy		
ATN 220-228-11	14.6	2.5M
ATN 220-228-14	16.2	4.7M
70 Cm Model		
ATN 420-470-6	10.2	0.6M
ATN 420-470-14	13.7	1.5M
ATN 432-11	16.7	1.85M
ATN 432-16LB	17.2	3.7M

Ferrite Baluns.	**Ratio**	**Freq. Range**
200W Encapsulated	1:1	3—150 MHz
200W Encapsulated	1:1	100—600 MHz
200W Encapsulated	4:1	3—150 MHz
1 KW Encapsulated	1:1	3—100 MHz
1 KW Encapsulated	4:1	3—100 MHz

Insulators Heavy Duty
No. 1 5/8 element on 2" boom
No. 2 large 3/8 element on 1" boom
No. 3 small 3/8 element on 1" boom

DSI

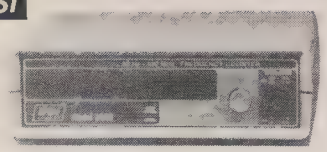

MODEL 5500 50Hz-512 MHz FREQUENCY COUNTER

More Counter For Less Money

The outstanding sensitivity of the 5500, the result of its unique engineering design, and built-in preamp assures stable, accurate readings every time.

FEATURES:

- Two BNC Inputs
- 1 Meg and 50 Ohm Input
- Factory Wired and Tested in USA
- 8 Large Digits
- 1 PPM TCXO
- Resolution 1 Hz at 50 MHz
- Resolution 1 Hz at 450 MHz

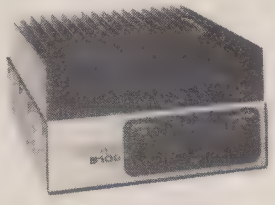

MODEL BI08 2 METER AMPLIFIER

IOW (in) — 80 (out)

MIRAGE by name — Miracle by performance. A top quality amplifier with a 1 year warranty on RF Power Transistors and 5 years on all other parts and labour.

FEATURES:

- Built-in receiver preamp
- Adjustable delay for SSB
- Remote control operation with optional RC—1 control head
- Heat sink providing more than adequate cooling
- Automatic internal change over relay keyable from external transmitter

Also 160W versions available

6 METRE VERSION DUE MARCH/APRIL

SOLE ATN QUEENSLAND DISTRIBUTOR

SERVICE Dept.

CW ELECTRONICS HAS A FULLY STAFFED AND EQUIPPED SERVICE DIVISION.

WE CAN SERVICE ALL YOUR AMATEUR RADIO GEAR EFFICIENTLY AND AT A REASONABLE COST.

WHOLESALERS, AGENTS, MANUFACTURERS AND RETAILERS CONSIDER US FOR YOUR QUEENSLAND SERVICE CONTRACTS, IN THE ENTHUSIAST AND COMMERCIAL ELECTRONICS MARKET.

CONTACT BRIAN BEAMISH, Manager

(07) 341 5377, AH: (07) 341 4767

Prices and Models are subject to change without prior notice

CW ELECTRONICS

CNR. MARSHALL RD & CHAMBERLAND ST.,
TARRAGINDI — BRISBANE PH (07) 48 6601
PO BOX 274, SUNNYBANK, QLD. 4109
AH: BRIAN (07) 341 4767

OBSERVATIONS OF A BEGINNER IN AMATEUR RADIO

By Ernie V. Bigg G-16384
(With acknowledgment to ISWL, England)
Submitted by Eric Trebilcock L30042

Towards the end of March last year I retired at the age of 69 years as a Service Manager to the Motor Trade. I had delayed my retirement by some four years because I feared boredom through having no hobbies and a dislike for gardening.

Just before my retirement, however, one of my senior technicians collapsed and subsequently died from heart failure and it was my duty to contact his widow regarding affairs connected with the Company. During this contact I discovered that the deceased was a radio SWL and was invited to inspect his equipment, which consisted of a CR100, two speakers, numerous valves and magazines and a pair of headphones. Out of sympathy I elected to purchase all these and well remember carrying the CR100 down a narrow flight of stairs — weight 81 lbs. At this time my knowledge of SW radio was NIL.

Most amateurs are familiar with the CR100, but to me it was a large metal box with knobs and a queer kind of calibration — as I turned them, so stations came on the air and I logged the positions, and within a week had located some 100 stations which I could regularly tune in to — Luxembourg, Monaco, Paris, Melbourne, Dublin, and so on, but the mode marked CW and SSB was and remained until I sold it — a mystery. At this stage I became somewhat interested and a few listeners in the area advised me to sell the CR100 and buy a modern communication receiver. The first person to answer my advert tuned in on lower SS band and obtained clear sound from an amateur station in West Bromwich and settled for purchase on the spot — much to my regret following my advancing knowledge on the subject. About this time I spoke to G8CA of Axminster, who persuaded me to purchase a Yaesu FRG 7000, and this literally provided the "Open Door" and introduced me to the world of amateurs. Various books on the subject were now bought and I even searched the local library for information. After obtaining the RSGB Call Book I discovered that many close friends were operators.

Advice was accepted to join RSGB, International SW League and WDXC; these clubs are more than a must and no question remains unanswered by them. By now my amateur friends were informing me of all the intricacies of the profession — antennas, SS band limits, CW, favourite times for listening. I was also advised to buy a Z Match for my antenna straight wire, 66 ft., 10 metres high — my experiments with added pieces of wire are amusing and sometimes they work. The FRG 7000 is excellent on all bands.

Recently I contacted the local education authority who are including a night study course for the "B" Certificate ARL Examination — if this is successful then I hope soon to speak to my friends on 2 metres — with the necessary equipment, of course. If the education authorities do NOT obtain enough support for a night study course then the Rapid Results College in London will be asked to accept me for tuition. At the time of writing this article only four weeks have passed, so progress is good and I am fulfilling a promise to ISWL NOT to be a sleeping member.

The following points of view are now recorded and I hope readers will accept them by remembering my lack of experience — at least I can give a newcomer's view.

(a) The "Q" language — a lot to learn and remember, and I wonder if all of them are needed — although I suppose amateurs from another country need them to convey their meaning. Very often I wish they'd use plain English when they can speak English.

(b) Too much importance seems to be attached to QSL cards and method to obtain them spoils listening. A few evenings ago I listened to the Falkland Islands and amateur stations were literally lining up to exchange necessary data for a card. It follows that instead of a description of the Island, its culture, family, etc., all that was heard each minute was a description of the transceiver, antenna and report — I was bored.

(c) It is hard to believe that after all these years the phonetic alphabet is not universal.

(d) I cannot understand the enormous interest there is in the tropical bands, where, except for the music, you must speak or understand at least three languages.

(e) To me it is unbelievable to read of the progress made by amateurs since Hertz and Marconi started the ball rolling and discovered radio waves, etc.

(f) My investigation shows that most licence holders are ex electrical trades, ex signals regts., ex radio and ships' operators, and makes me wonder whether I can ever reach a stage of proficiency to join their selective ranks. Electrons, protons, resistance, Ohm's Law, sine waves, Morse code — it seems a lot to digest at the moment and frightens me a little.

(g) What a boon this amateur radio is, and source of satisfaction to the disabled, bedridden, retired persons, those who are lonely and/or living on their own — the amateurs have surely contributed well toward a solution to happiness for these types.

(h) Whilst a strict code of conduct must be followed by licence holders for obvious reasons, I deplore criticisms I have heard of personalities, especially in the arena of politics.

(i) I believe that all those who are privileged to join this band of clever and dedicated men and women should always try to contribute to it, by giving opinions, spreading new knowledge and, where possible, endeavouring to improve on technical matters and/or research. I hope to do some of this.

(j) Why are female licence holders in such a minority?

(k) The amateurs are a dedicated, skilled and professional body of people, helpful, kind, and the world of radio has much to thank them for; their ranks include Kings, professional men, artists ,the sick and disabled, and the DIY expert, and I feel privileged and honoured to be part of them and to be called not a Radio Ham, but a DXer.

Finally, I conclude this article by expressing my own type of listening, and that is the 15 and 80 metre band — it's all talking for me and I am interested and very amused sometimes at the conversations I hear on them — good descriptions of the station environment — light protracted arguments, and skeds which you can set your clock to each evening and know you're in for some real pleasure. My FRG 7000 is worth every penny. ■

Join the IW net at 2300Z on Thursdays on 14165 kHz when you have intruder information.

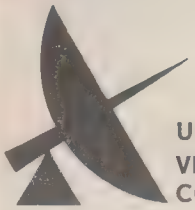

UKW-BERICHTE
VHF-
COMMUNICATIONS

The magazine for amateurs interested in VHF and upwards:

- Quarterly — February, May, August and November.
  - 1 year surface mail $8.20
  - 1 year airmail $12.40

  Whenever in the year you subscribe you will receive that year's issues.
- Issue 3/1979 included:—

  Meteosat reception and display system

  13 cm doubler

  9 cm SSB

  3 cm dish radiator

  2m 20W PA

  Quadrature demodulators

  Xtl circuit design
- Write now to:—

WIA MAGPUBS

BOX 150, TOORAK 3142

AT LAST!

THE TYPE 610 BRITISH POST OFFICE designed MORSE CODE KEY

There has never been a better designed Morse Code Key — SOLID, ROBUST and BEAUTIFULLY BALANCED.

$27.50 (Post Paid)

"LEARNING THE MORSE CODE" — Cassette Album Training Course. You will progress rapidly using this modern training system.

PRICE $20 (Per Album of 3 Cassettes)

WILLIAM WILLIS & Co. Pty. Ltd.

77 CANTERBURY ROAD, CANTERBURY, VIC. 3216
PHONE 836 0707

IT'S HERE!

This is the latest Dick Smith 1980 Catalogue packed full of interesting items from boat radios to computers from hi fi to components, from telephone diallers to heated toilet seats, it's all in this 104 page catalogue. Get yours NOW, supplied FREE with the April issues of Electronics Today International and Electronics Australia. If you have difficulty getting your catalogue send for it direct from our Mail Order Centre, price 75c.

Call in to one of our stores or by Mail Order
DICK SMITH ELECTRONICS
Mail Order Centre PO Box 321 NORTH RYDE NSW 2113 Ph (02) 888 3200

HOW MUCH ELECTRICAL CURRENT CAN YOUR HEART TOLERATE?

Most of us don't usually think about it any more than we have to, but the typical amateur is exposed to several risks peculiar to his hobby. He or she may forget, once in a very great while, to shut off the house current before probing the innards of a transceiver. And because an amateur may very well be a middle-aged or older male, the ogre of coronary artery disaster can be lurking nearby.

Only 0.2 mA (AC) applied directly to the heart may cause a series of wild, irregular, ineffective movements. Instead of squeezing down rhythmically like a fist clenching and unclenching, the heart quivers like a bag of worms. Circulation stops. In about four minutes the cells of your brain and spinal cord begin to die because they are extremely sensitive to lack of oxygen normally carried in the blood. This unhappy state is the result of one form of cardiac arrest — ventricular fibrillation. 1 or 2 mA at 50 Hz can just be felt by the moistened finger. 16 mA causes pain and spasm, but at that level you can still let go if you want to. 100 mA is enough, if it passes through the heart en route from one hand to the other, to create the same "bag of worms" problem as the 0.2 mA applied directly. Larger currents tend to stop the heart completely — no movement at all; not even the bumbling bag of worms. This complete lack of muscular contraction is called asystole. It is the other kind of cardiac arrest. Of course it, too, requires immediate treatment.

Alternating current is meaner than direct. Even in small doses it causes muscles to contract. When you are zapped by a suitable alternating current, your heart stops beating, your breathing stops and you can't let go! The muscle contraction holds you there while the current builds up to an evermore effective dose. If anyone else is around (you can't call them) to flip the switch and pull you free, your only help is that your wife forgot to pay the power bill. Just maybe they'll disconnect you in time. Electricity can damage your body in other ways too, causing selective damage along major blood vessels because of their high conductivity, electrothermal burns to skin and other areas of high resistance, and widely spread nerve defects caused by lack of oxygen. However, these generally don't call for emergency treatment of the same urgency as cardiac arrest.

Very sedentary or arthritic hams may take some small comfort from this statistic (others be careful!): Falls kills about 17 times as many as do electric currents, and cardiac arrest may follow the complication of a bad fall. But the real "hit man" is artery disease. He carries off as many as 17 times the number resulting from falls and electrictiy combined.

Much dying is, tragically, not necessary. Death commonly occurs only after a period of cardiac arrest; and cardiac arrest could be treated effectively by millions of persons who don't realise how simple it is to learn. You can learn how to save some from death. You can learn in one evening.

Cardiopulmonary resuscitation (CPR) is a skill, just as learning to send code — only easier. It is a simple skill. Check with your local first aid group, ambulance or doctor.

—From QST and "The Lyrebird". ■

MODIFICATIONS TO THE WESTON HF-1000 TRANSCEIVER

Gareth Davey VK2ANF
29 Wyuna Rd., West Pymble 2073

The Weston HF-1000 is a 27 MHz AM 1-watt hand-held transceiver and is very similar to other brands, e.g. Midland, Contact. This article should be of particular interest to the Novice who may wish to convert such a unit to 28 MHz.

Because of the similarities between the Weston HF-1000 and some other brands, the details below may serve as a basic guide for conversion of several other models beside the Weston.

In a note which follows, information is provided regarding the availability of low-cost crystals for some channels in the 28 MHz band.

The work is based directly on personal experience with the set pictured, and therefore has been proven in practice. The four modifications are:

MOD. 1 — EXTERNAL ANTENNA CONNECTOR

Operation of the transceiver will be possible on an antenna other than the in-built Telescopic Antenna (ROD ANT), and will also provide easier test equipment connection for maintenance and adjustments.

MOD. 2 — NEGATIVE CHASSIS EARTH

The transceiver has NPN transistors in all RF stages, and PNP transistors in the audio and squelch circuits. The circuit board earth has been made positive. This modification will give a negative chassis earth so that operation will be possible (for example) in a negatively-earthed vehicle using external battery and antenna.

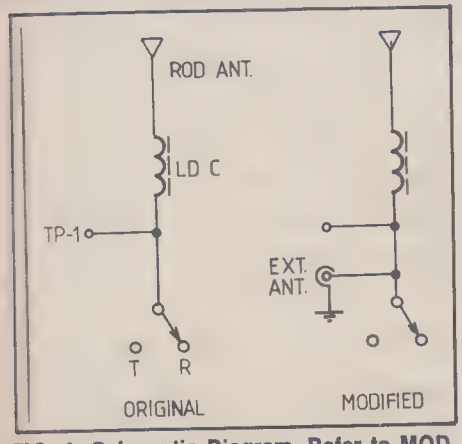

FIG. 1: Schematic Diagram. Refer to MOD. 1 and Photo 2 — External Antenna Connector.

MOD. 3 — BATTERY CHARGER CURRENT LIMIT

Damage due to excess current can be caused to rechargeable batteries (where fitted) by chargers having no current limiting resistors, as is common practice with many commercially available units. This modification will reduce the current to the recommended level when this type of charger is used.

MOD. 4 — TRANSCEIVER OPERATION ON THE 10 METRE (28 MHz) AMATEUR BAND

While the unit will operate on 28 MHz without retuning from 27 MHz, there is some degradation in performance. Some component changes and realignment are required to restore normal operation.

COMPONENTS REQUIRED

Mod. 1 — 1 x BNC bulkhead receptacle, type UG-1094/U or similar.

Mod. 2 — 2 x insulating washers, as used on TO3 transistor packages. 1 x 0.01 uF ceramic capacitor.

Mod. 3 — 1 x 47 ohm ½ watt resistor. 1 x 1N4004 diode or similar.

Mod. 4 — 1 x 18 pF ceramic capacitor. 2 x 39 pF ceramic capacitors.

MODIFICATION NOTES

All four modifications as outlined above should be performed at the same time. The following procedures have been organised with this in mind.

Some components identified in capital letters refer to the designations on the Schematic Diagram supplied with the transceiver.

Standard printed circuit board techniques should be used: temperature-controlled fine-pointed soldering iron, fine solder, and note that too much heat will lift the PCB tracks.

It is important to use non-metallic tools in the alignment procedure to prevent detuning and breaking ferrite slugs. The following test equipment is required: RF Signal Generator, AF Voltmeter, RF Dummy Load and Power Meter, Field Strength Meter. This is standard equipment for any HF transmitter/receiver alignment, but for those without access to such gear, alternative tuning methods have been given.

MODIFICATION PROCEDURE

1. Undo screws A and B and remove the Printed Circuit Board (PSB) from the chassis (see Photo 1).

EXTERNAL ANTENNA CONNECTOR

2. Mark the transceiver cabinet for the BNC socket in line with the other holes on the side panel. Position it midway between the CHG jack bracket and the top of the battery compartment, so that the BNC retaining nut will not interfere with either.
3. Drill the hole in the side panel carefully. To avoid damaging the PCB, crystals and slugs, etc., keep the PCB away from the cabinet during drilling. Brush away all metal residue.
4. Mount the BNC connector and securely tighten the retaining nut.
5. Solder a wire from the centre terminal of the BNC connector to the Antenna Loading Coil terminal (LD-C) connected to TP-1. See Circuit 1 and Photo 2. This wire must not go to the ROD ANT side of LD-C.

NEGATIVE CHASSIS EARTH

6. Unscrew the 2 PCB stand-offs from the inside of the case (see Photo 3).
7. Remove the spacers on the bottom of both PCB stand-offs.
8. Screw both PCB stand-offs back inside the case without their spacers.
9. Very carefully drill out the 2 Board mounting holes on the PCB so that the insulating sleeves on the TO3 washers will just fit through. See Photo 2.
10. Place the TO3 insulating washers over the Board mounting holes on the copper side of the PCB, with the insulating sleeves through the holes towards the component's side.
11. Unsolder the wire between the PTT switch (S1-A changeover contact)

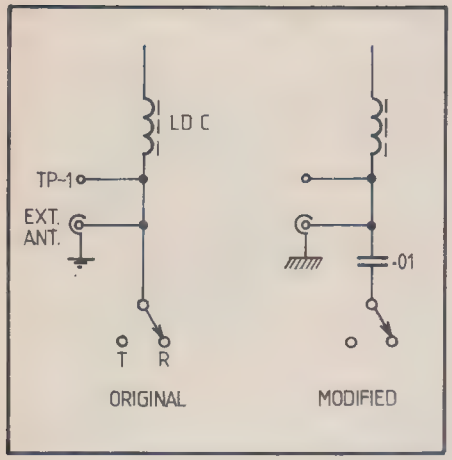

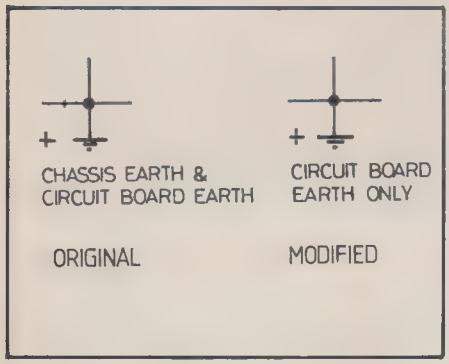

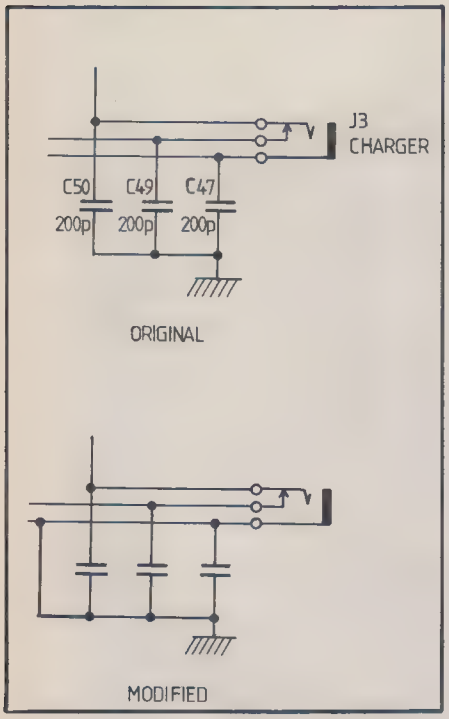

FIG. 2: Schematic Diagrams. Refer to MOD. 2 and Photo 2 — Negative Chassis Earth.

and the Antenna Loading Coil (LD-C). Replace the wire with a 0.01 uF ceramic capacitor (insulate the leads with spaghetti). See Circuit 2 and Photo 2.

12. Connect a wire from the negative terminal on the CHG jack to some part of the chassis where good electrical contact can be made, e.g. the body of the BNC receptacle — you may have to lightly file part of the chamber so that the solder will take. See Photo 2.
    Note: For floating DC, not negative, chassis earth, insert a 0.01 uF ceramic capacitor in series with the wire in Step 12.

BATTERY CHARGER CURRENT LIMIT

13. Solder the leads of a 1N4004 diode on to the leads of a 47 ohm ½ watt resistor, so that the diode and resistor are in parallel.
14. Unsolder the wire connecting the centre terminal of the AC jack to the unswitched contact of the CHG jack.
15. Solder the diode/resistor combination in place of the wire removed in Step 14, with the diode anode (A) connected to the centre terminal of the AC jack. The diode cathode (K) must connect to the unswitched contact of the CHG jack. See Circuit 3 and Photo 2.

TRANSCEIVER OPERATION ON THE 10 METRE (28 MHz) AMATEUR BAND

16. Remove capacitor C20 (40 pF) in the Rx Oscillator, and replace with a 39 pF ceramic capacitor.
17. Remove capacitor C29 (20 pF) in the Tx Oscillator, and replace with an 18 pF ceramic capacitor.
18. Remove capacitor C27 (40 pF) in the Tx PA Stage, and replace with a 39 pF ceramic capacitor.
19. Insert the 28 MHz channel crystals in the appropriate sockets. See Photo 1.

RE-ASSEMBLY

20. Remount the PCB on the 2 stand-offs. Ensure that the TO3 insulating washers are in position so that the copper tracks on the PCB around the Board mounting holes are insulated from the metal stand-offs.
21. Secure the PCB with screws A and B (see Photo 1).

DC TESTS

22. With the battery pack connected, switch the transceiver on and increase the volume control to maximum. If no sound is heard from the speaker, a fault may exist in the Battery Charger Current Limit wiring — recheck Steps 13 to 15.

Rx TESTS

23. Connect an RF signal generator capable of a stable output on 28 MHz to the BNC External Antenna socket. If a generator is not available extend the inbuilt Telescopic Antenna (ROD ANT) and use a signal off air from another transmitter on the same channel.
24. Set the RF signal generator to the channel frequency on 28 MHz, as determined by the Rx crystal frequency plus the IF frequency. This should equal the Tx crystal frequency.
25. Modulate the output signal of the RF signal generator with a constant-amplitude audio frequency tone; for example: 85 per cent modulation by a 1 kHz tone.
26. Adjust the 28 MHz output signal level from the RF signal generator until it can be heard weakly from the transceiver's speaker. The volume control should be at setting 10 (maximum output).*

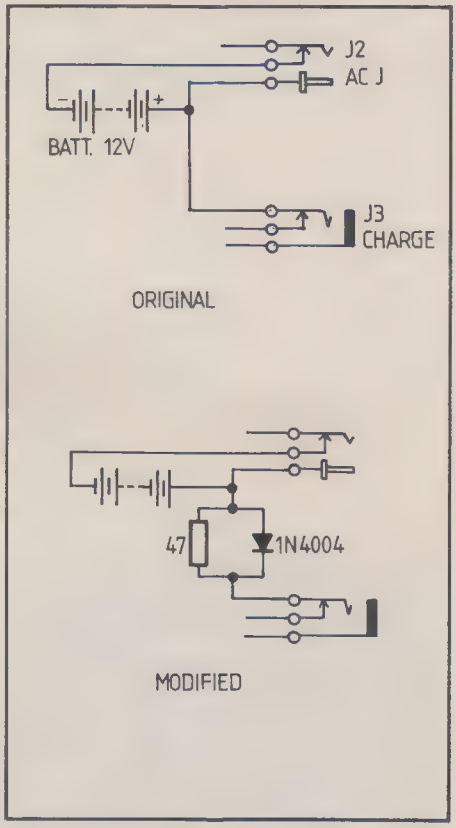

FIG. 3: Schematic Diagram. Refer to MOD. 3 and Photo 2 — Battery Charger Current Limit.

27. Plug an audio (AC) voltmeter into the EAR jack on the transceiver. A multimeter on its lowest AC scale may be suitable. With the RF signal generator set as per Steps 24 to 27, a reading should be apparent on the audio voltmeter; if not, a more sensitive meter will have to be used. (Tuning by ear is not recommended, but is possible if nothing else is available.)
28. Adjust Rx Oscillator Coil O-C for maximum received signal, as indicated on the audio voltmeter. The 28 MHz output signal level from the RF signal generator may have to be reduced during the adjustment to prevent AGC action in the receiver affecting the increase in audio output level.

* If no signal can be heard after tun-

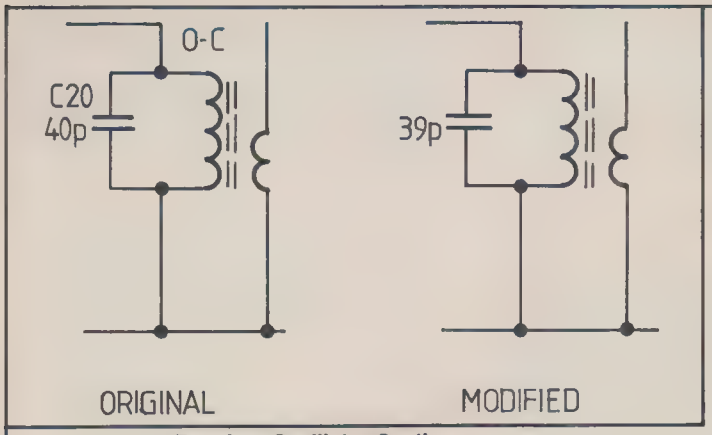

Receiver Oscillator Section.

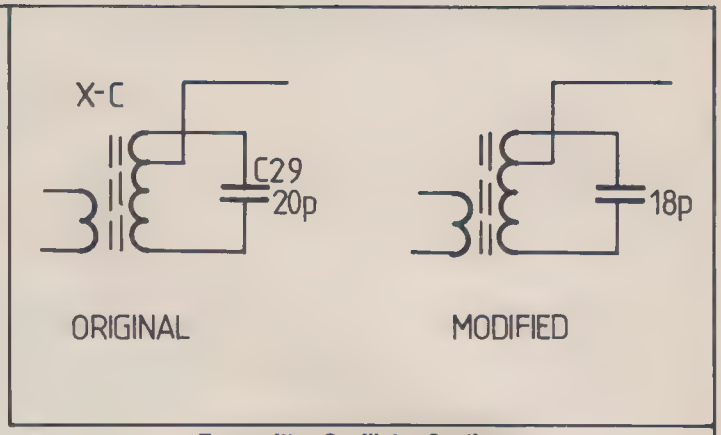

Transmitter Oscillator Section.

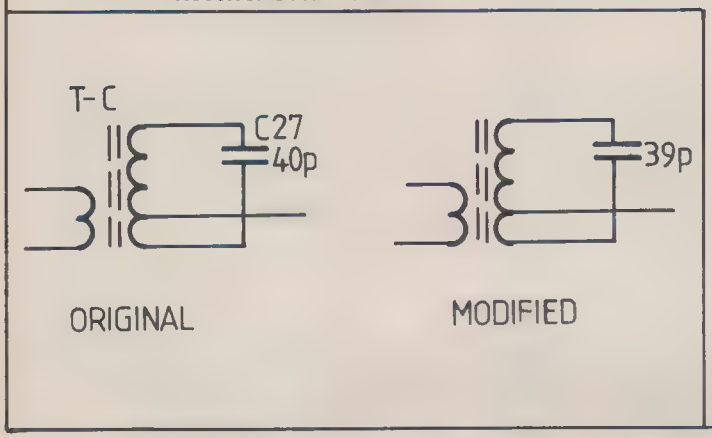

Transmitter PA Section.

FIG. 4: Schematic Diagrams. Refer to MOD. 4 and Photo 1 — 10m 28 MHz Amateur Band Operation.

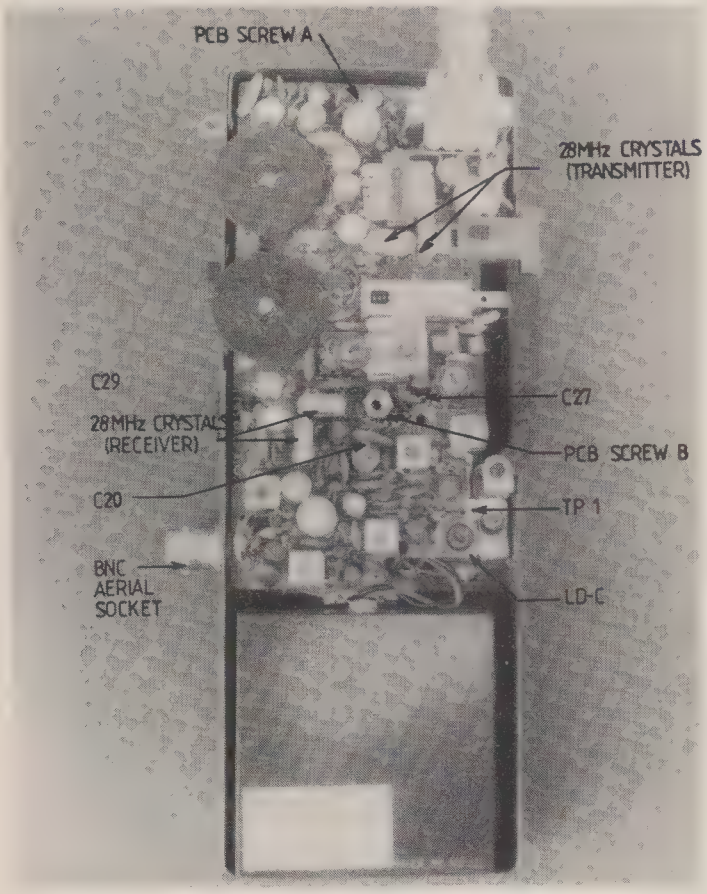

PHOTO 1

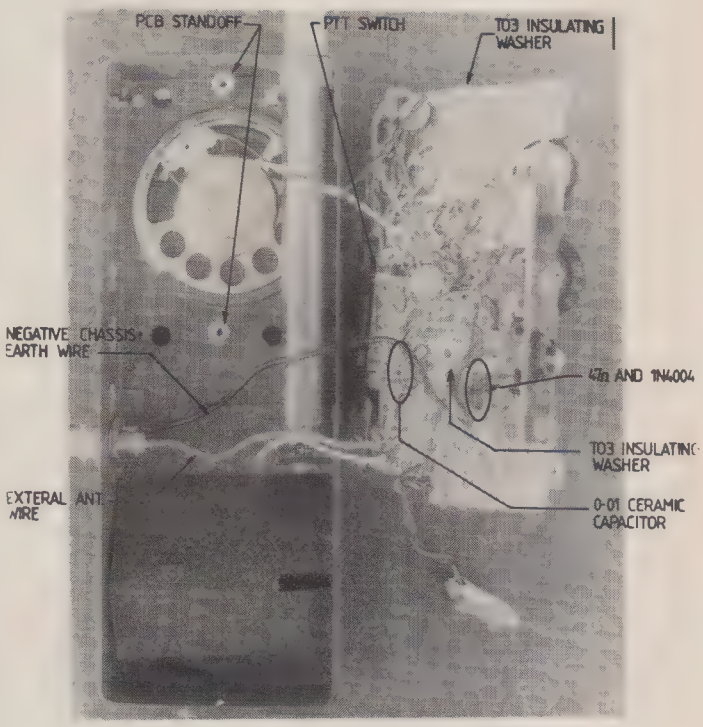

PHOTO 2

ing O-C, a fault may exist in capacitor C20 in the Rx Oscillator — check Step 16.

29. Unplug the audio voltmeter from the EAR jack. Adjust the 28 MHz output signal level from the RF signal generator until it can be heard weakly from the transceiver's speaker. Plug the audio voltmeter into the EAR jack.
30. Adjust Rx front end coil A-C for maximum received signal, as indicated on the audio voltmeter. The 28 MHz output signal level from the RF signal generator may have to be reduced during the adjustment to prevent AGC action in the receiver affecting the increase in audio output level.
31. Perform Steps 26 to 30 again to finely adjust the Rx tuning. Where 2 channels are fitted, change the CHANNEL SELECTOR and the RF signal generator frequency during Steps 28 and 30, and adjust O-C and A-C for equal received signal on both channels.
32. Once the Rx tests have been performed successfully, disconnect the RF signal generator and the audio voltmeter.

Tx TESTS

33. Connect an RF Power Meter and a 50 ohm RF Dummy Load to the BNC External Antenna socket. Fully retract the inbuilt Telescopic Antenna (ROD ANT).
34. Operate the PTT switch on the transceiver, and hold in for short periods only during Steps 35 to 37.
35. Adjust Tx Oscillator coil X-C for maximum power output, as indicated on the RF Power Meter.*
36. Adjust Tx PA coil T-C for maximum power output, as indicated on the RF Power Meter.

    * If no power output is indicated on the RF Power Meter after tuning X-C and T-C, a fault may exist in capacitors C27 or C29 in the Tx circuit — check Steps 17 and 18.
37. Finely adjust X-C and T-C for maximum power output. Where 2 channels are fitted, change the CHANNEL SELECTOR and adjust X-C and T-C for equal power outputs on both channels.
38. Release the PTT switch on the transceiver, and disconnect the RF Power Meter and the 50 ohm RF Dummy Load from the BNC socket.
39. Fully extend the inbuilt Telescopic Antenna (ROD ANT).
40. Operate the PTT switch on the transceiver, and hold in for short periods only during Step 41.
41. Using a Field Strength Meter located nearby, adjust the Antenna Loading Coil LD-C for maximum indication on the Field Strength Meter. Where 2 channels are fitted, change the CHANNEL SELECTOR and adjust LD-C for equal indication on both channels.

    If a Field Strength Meter is not available, the S-meter on a nearby transceiver can be used, provided that it is operated in the lowest part of the S-meter scale where the greatest sensitivity usually exists.
42. Release the PTT switch on the transceiver.
43. Replace the back cover on the cabinet. The unit is now ready for normal 28 MHz operation.

A NOTE ON 28 MHz CHANNEL CRYSTALS

In modifying 27 MHz transceivers to 28 MHz, the availability of suitable crystals has always been an expensive proposition. However, depending on the frequency required, 28 MHz channel crystals for AM hand-held transceivers can be cheaply obtained either new or second-hand.

Rx CRYSTALS

A good source of 28 MHz Rx crystals is from the 27 MHz Marine Band. These are readily and cheaply available on the following frequencies: 27.880 MHz (most popular), 27.890 MHz, 27.900 MHz and 27.910 MHz.

When these are plugged into the Rx oscillator of a hand-held transceiver having a 455 kHz IF, it will be able to receive the following frequencies: 28.335 MHz, 28.345 MHz, 28.355 MHz and 28.365 MHz respectively.

Tx CRYSTALS

The receiver can be readily accommodated for 28 MHz crystals, but it would appear that the transmitter is somewhat more difficult.

One of the more popular distributors of electronic components has had specially made 27 MHz Marine Band crystals, which he calls "HI-SIDE" crystals. For Marine Band users, these are used in their Rx oscillator and are on frequencies *above* the signal frequency (on the high side), not below the signal frequency as is usually the case.

The intention of this was to change the receiver's image frequency from the CB portion of 27 MHz up to the amateur portion of 28 MHz — strange logic when you compare the power levels normally used on 27 MHz and 28 MHz, but we can use these Hi-Side crystals to our advantage.

Hi-Side crystals are available on the following frequencies: 28.335 MHz, 28.345 MHz, 28.355 MHz and 28.365 MHz. Conveniently, and not by accident, these match the Rx crystals as indicated previously, and thus give the necessary transmit capability.

RESULTANT 28 MHz CHANNEL FREQUENCIES

Rx crystal: 27.880 MHz, 27.890 MHz, 27.900 MHz, 27.910 MHz. Tx crystal: 28.335 MHz, 28.345 MHz, 28.355 MHz, 28.365 MHz.

Since 27.880 MHz crystals are the most popular and readily available, it is suggested that 28.335 MHz become a net frequency for 10 metre AM hand-held transceivers. Several stations in Sydney are already fitted with this frequency. ■

QSP

USA BAND SEGMENTS ON HF BANDS

January 1980 QST lists the following for stated modes (max. stated for Extra level) (in parenthesis are others.

kHz	Mode
1800- 1810	CW, DX calling
1825- 1830	DX window (no W/VEs)
3500- 3775	A1 and F1
3610- 3630	RTTY
3845	SSTV
3775- 4000	A1 and Voice
7000- 7150	A1 and F1
7090- 7100	RTTY
7150- 7300	A1 and Voice
14000-14200	A1 and F1
14080-14100	RTTY
14200-14350	A1 and Voice
(14210	Int. NBVM calling)
14230	SSTV
21000-21250	A1 and F1
21090-21100	RTTY
21090-21.100	RTTY
21250-21450	A1 and Voice
28000-28500	A1 and F1
28090-28100	RTTY
28500-29700	A1 and Voice
28680	SSTV
28300-29500	Satellite downlinks
29520-29580	Repeater inputs
29600-	FM simplex
29620-29680	Repeater outputs
(50.50.1 MHz	A1 and F1
50.1-54.0	A1 and Voice
144-144.1	A1 and F1
144.1-148.0	A1 and Voice)

The low end of the US phone segment is reserved for DX, the high end for traffic — 14 MHz band especially — no definite dividing lines. SSTV is limited to the low ends of the phone segments except for 28 MHz band upwards, where it is the same as the phone segments. The bandwidth for F3 below 29.0 MHz and between 50.1 and 52.5 MHz shall not exceed that of an A3 emission having the same audio characteristics. Below 50 MHz the bandwidth of an A5 or F5 shall not exceed that of an A3 single sideband emission. From 50 to 225 MHz single or double sideband A5 may be used but the bandwidth shall not exceed that of an A3 single or double sideband respectively. For F5 the bandwidth shall not exceed that of an A3 single sideband emission. ■

CONTROL OVER AR Tx

According to Worldradio November 1979 the USA's FCC denied petitions requesting the FCC to institute a rule-making proceeding to limit the sale of amateur transmitting equipment to licensed amateur operators. One petitioner suggested point of sale control by registration procedures. One reason given for the refusal was, it is said, the lack of FCC staff and funds to enforce such an operation. Another note was that the form of record-keeping caused a proliferation of paper work which was undesirable because of the low cost effectiveness of the proposals. Also the FCC is stated to have doubts about effectiveness and difficulty in implementing such a programme due to the large number of radio equipment dealers. Meantime the FCC would continue to evaluate the problem and study the effectiveness of the type acceptance programme adopted in Docket 21117 (refers to external RF power amplifier operating below 144 MHz). ■

JOTA

A reminder for your diary. 1980 JOTA will be 18th-19th October, 1980. ■

THE SEVERITY OF AN EARTHQUAKE

The severity of an earthquake can be expressed in terms of both intensity and magnitude. However, the two terms are quite different, and they are often confused by the public.

Intensity is based on the observed effects of ground shaking on people, buildings, and natural features. It varies from place to place within the disturbed region depending on the location of the observer with respect to the earthquake epicentre.

Magnitude is related to the amount of seismic energy released at the hypocentre of the earthquake. It is based on the amplitude of the earthquake waves recorded on instruments which have a common calibration. The magnitude of an earthquake is thus represented by a single, instrumentally determined value.

Earthquakes are the result of forces (deep within the Earth's interior) that continuously affect the surface of the Earth. The energy from these forces is stored in a variety of ways within the rocks. When this energy is released suddenly, for example by shearing movements along faults in the crust of the Earth, an earthquake results. The area of the fault where the sudden rupture takes place is called the focus or hypocentre of the earthquake. The point on the Earth's surface directly above the focus is called the epicentre of the earthquake.

THE RICHTER MAGNITUDE SCALE

Seismic waves are the vibrations from earthquakes that travel through the Earth; they are recorded on instruments called seismographs. Seismographs record a zigzag trace that shows the varying amplitude of ground oscillations beneath the instrument. Sensitive seismographs, which greatly magnify these ground motions, can detect strong earthquakes from sources anywhere in the world. The time, location, and magnitude of an earthquake can be determined from the data recorded by seismograph stations.

The Richter magnitude scale was developed in 1935 by Charles F. Richter of the California Institute of Technology as a mathematical device to compare the size of earthquakes. The magnitude of an earthquake is determined from the logarithm of the amplitude of waves recorded by seismographs. Adjustments are included in the magnitude formula to compensate for the variation in the distance between the various seismographs and the epicentre of the earthquakes. On the Richter Scale, magnitude is expressed in whole numbers and decimal fractions. For example, a magnitude of 5.3 might be computed for a moderate earthquake, and a strong earthquake might be rated as magnitude 6.3. Because of the logarithmic basis of the scale, each whole number increase in magnitude represents a tenfold increase in measured amplitude; as an estimate of energy, each whole number step in the magnitude scale corresponds to the release of about 31 times more energy than the amount associated with the preceding whole number value.

At first, the Richter Scale could be applied only to the records from instruments of identical manufacture. Now, instruments are carefully calibrated with respect to each other. Thus, magnitude can be computed from the record of any calibrated seismograph.

Earthquakes with magnitude of about 2.0 or less are usually called microearthquakes; they are not commonly felt by people and are generally recorded only on local seismographs. Events with magnitudes of about 4.5 or greater — there are several thousand such shocks annually — are strong enough to be recorded by sensitive seismographs all over the world. Great earthquakes, such as the 1906 San Francisco earthquake and the 1964 Good Friday earthquake in Alaska, have magnitudes of 8.0 or higher. On the average, one earthquake of such size occurs somewhere in the world each year. Although the Richter Scale has no upper limit, the largest known shocks have had magnitudes in the 8.8 to 8.9 range.

The Richter Scale is not used to express damage. An earthquake in a densely populated area which results in many deaths and considerable damage may have the same magnitude as a shock in a remote area that does nothing more than frighten the wildlife. Large-magnitude earthquakes that occur beneath the oceans may not even be felt by humans.

THE MODIFIED MERCALLI INTENSITY SCALE

The effect of an earthquake on the Earth's surface is called the intensity. The intensity scale consists of a series of certain key responses such as people awakening, movement of furniture, damage to chimneys, and finally — total destruction. Although numerous intensity scales have been developed over the last several hundred years to evaluate the effects of earthquakes, the one currently used is the Modified Mercalli (MM) Intensity Scale. It was developed in 1931 by the American seismologists Harry Wood and Frank Neumann. This scale, composed of 12 increasing levels of intensity that range from imperceptible shaking to catastrophic destruction, is designated by Roman numerals. It does not have a mathematical basis; instead it is an arbitrary ranking based on observed effects.

The Modified Mercalli Intensity value assigned to a specific site after an earthquake has a more meaningful measure of severity to the non-scientist than the magnitude because intensity refers to the effects actually experienced at that place. After the occurrence of widely-felt earthquakes, questionnaires are sent into the disturbed area requesting the information so that intensity values can be assigned. The results of this canvass and information furnished by other sources are used to assign an intensity value, and to compile isoseismal maps that show the extent of various levels of intensity within the felt area. The maximum observed intensity generally occurs near the epicentre.

The following is an abbreviated description of the 12 levels of intensity.

I. Not felt except by a very few under especially favourable conditions.

II. Felt only by a few persons at rest, especially on upper floors of buildings. Delicately suspended objects may swing.

III. Felt quite noticeably by persons indoors, especially on upper floors of buildings. Many people do not recognize it as an earthquake. Standing motor cars may rock slightly. Vibration similar to the passing of a truck. Duration estimated.

IV. Felt indoors by many, outdoors by few during the day. At night, some awakened. Dishes, windows, doors disturbed; walls make cracking sound. Sensation like heavy truck striking building. Standing motor cars rocked noticeably.

V. Felt by nearly everyone; many awakened. Some dishes, windows broken. Unstable objects overturned. Pendulum clocks may stop.

VI. Felt by all, many frightened. Some heavy furniture moved; a few instances of fallen plaster. Damage slight.

VII. Damage negligible in buildings of good design and construction; slight to moderate in well-built ordinary structures; considerable damage in poorly built or badly designed structures; some chimneys broken.

VIII. Damage slight in specially designed structures; considerable damage in ordinary substantial buildings with partial collapse. Damage great in poorly built structures. Fall of

chimneys, factory stacks, columns, monuments, walls. Heavy furniture overturned.

IX. Damage considerable in specially designed structures; well-designed frame structures thrown out of plumb. Damage great in substantial buildings, with partial collapse. Buildings shifted off foundations.

X. Some well-built wooden structures destroyed; most masonry and frame structures destroyed with foundations. Rails bent.

XI. Few, if any (masonry) structures remain standing. Bridges destroyed. Rails bent greatly.

XII. Damage total. Lines of sight and level are distorted. Objects thrown into the air.

Another measure of the relative strength of an earthquake is the size of the area over which the shaking is noticed. This measure has been particularly useful in estimating the relative severity of historic shocks that were not recorded by seismographs or did not occur in populated areas. The extent of the associated felt areas indicates that some comparatively large earthquakes have occurred in the past in places not considered by the general public to be regions of major earthquake activity.

Reprinted from International Civil Defence, October 1979. ■

SPOTLIGHT ON SWL-ING

Mark Stephenson VK3NOY/L30848

This month we start a new column for AR, and in forthcoming issues Short Wave Listeners will have the chance to introduce themselves to other readers and offer hints and advice for those interested in the art of Short Wave Listening.

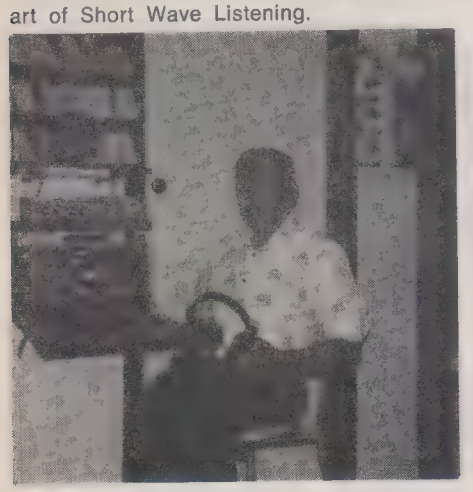

Although a keen breeder of Border Collies, Mr. A. J. Harrison L30698 also finds time to send many QSLs to unwary amateur and broadcast stations. The main station receiver is an FRG-7 with digital readout and two 2.4 K/c filters in series for SSB. The receiver has been greatly improved through modifications performed after reading past copies of Amateur Radio. (See December 1977 Amateur Radio, page 22.)

Country count at the moment is 200 confirmed with over 2000 cards sent. The antenna system is a dipole mainly used on 20 metres coincidentally 20 metres above the ground. ■

The antenna system in use.

"SHORT" POEM

In the little old township of Kenwood,
Way out beyond Anode Bend,
There's the grave of an Amateur Full Call
Who lies earthed at his positive end.
Let us give him his due in all fairness —
He was good with the key; he had brains;
But he once was a little too careless
When connecting his rig to the mains.
There's a moral in this little story —
A moral a novice could see;
If you don't want short-circuits to Glory
Don't monkey about with HT

Anonymous: Submitted by P. D. Thomas VK5ZPT. ■

'AMATEUR RADIO' — 1980

I've got a new transceiver
It's synthesised of course,
It sends all modes and RTTY
And generates the Morse.

It's got a micro in it
Which calls and logs them too.
It prints the QSL cards,
There's nothing left to do.

And so I'll lock the shack up
And let it have a ball.
And I'll go weed the garden.
IT WON'T NEED ME AT ALL!

Roy VK3AOH ■

QSP

WPX
Seems to be a peculiar abbreviation. It is the CQ Magazine's Worked All Prefixes Award and currently for mixed CW/Phone the top listing goes to W4WV with 1805 different prefixes confirmed. No VK is listed. Another of CQ's awards is WAZ — worked all zones (40). ■

QLS MANAGERS
At the January 1980 meeting of the VK5 Division the President announced the "retirement" of George Luxon VK5RX from the position of Divisional QSL Manager after a term of 50 years. Is this a world record? Another long-time QSL Manager was Ray Jones VK3RJ. He retired last year as Federal QSL Manager after a total of 50 years in the QSL post for VK3 and then Federal. ■

PREFIXES
According to October 1979 Ham Radio the ITU has allocated prefixes Y2-Y9 to the East German Republic. Under the new call sign system DM2AAO would become Y21AO, while DM2CAO would become Y23AO. Club stations will become Y3 (Y31AA for example) and contest teams will hold call signs within the block Y31A-Y39Z. ■

AMATEUR RADIO PHILATELISTS
The Radio Amateurs' column in the December 1979 issue of the Telecommunication Journal reviews the postage stamps issued to honour amateur radio. The first was the USA 5 cent postage stamp issued in 1965 on the occasion of the 50th anniversary of the ARRL. The second was an 0.85d. stamp in 1966 by Yugoslavia to mark the 20th anniversary of SRJ. Colombia issued a 60 peso stamp in 1973 to mark the 40th anniversary of the LCD. Also in 1973 the USSR issued a 4k stamp paying homage to Ernst Krenkel, a prominent amateur. Poland issued a 1.50z stamp in 1975 for the IARU Conference in Warsaw that year. In the same Year Costa Rica issued three separate airmail stamps of 1.00, 1.10 and 2.00c values to recognise the 16th annual meeting of FRACAP. In 1977 the Dominican Republic issued two stamps of 6c and 12c for the 50th anniversary of RCD, Brazil issued a 1.30 Cr dollar stamp carrying the words "Day of the Radio Amateur" and Japan issued a 50y stamp commemorating the 50th anniversary of JARL. In 1979 the Dominican Republic issued a 10c stamp relating to the Beata Is. amateur competition, Bolivia issued a 3p stamp carrying the insignia of RCB, West Germany a 60p stamp honouring WARC 79 and finally Switzerland issued a 70c stamp for the 50th anniversary of USKA. Article by Vic Clark W4KFC. ■

PRIORITIES
"The Amateur Radio priority comes so far down the list it is practically invisible." Comment by an FCC District Officer in California about illegal interference on the amateur bands as reported in Worldradio News February 1980. Another comment about getting attention was the old saying "The barking dog gets the biscuit". ■

HELP WITH INTRUDER WATCHING

PICK OF THE PICS FROM VK6

During the latter part of 1979 the West Australian Repeater Group ran a raffle to acquire funds for a wind generator/tower combination to be used at a more suitable location for the existing Channel 4 Repeater.

We would like to thank all those who participated, especially the Amateurs from the Eastern States of Australia. The results are as follows:—

First prize was won by Harry Stephens VK6ZZ who is shown in photo 1 with the Icom IC22S which was donated by WILLIS ELECTRONICS and presented by Adrian Kelly, the Director. Adrian is shown in photo 2 presenting the unit to Harry.

Gregor Cox VK3ZCG of ZCG ANTENNAE, Lindenow Victoria (via Alyn VK6ZGA) donated a 5/8 2m antenna with base and coax which now proudly resides on the roof of the VK6FC mobile owned by Chris Carter, the winner of the second prize.

The West Australian Repeater Group donated three years subscription to the group as third prize. This was won by Jack Cowles VK6EJ of Geraldton.

Photo 3 shows (from left to right) — Trevor Solomon VK6ZCB, the President of the WARG, Adrian Kelly of WILLIS ELECTRONICS, Harry Stephens VK6ZZ happily clutching his first prize, Gill Weaver VK6YL, Secretary of the group and Alyn Maschette VK6ZGA, a member of the group who worked very hard to make the raffle a success.

The members of the WA Repeater Group would like to thank WILLIS ELECTRONICS of 993 Hay Street, Perth, for their generous donation of the IC22S which made the selling of the 500 tickets a very easy task. We would also like to extend our appreciation to Frank Taylor VK6JK for taking the presentation photographs at the January meeting of the Wireless Institute of Australia WA Division. ■

PHOTO 3

PHOTO 1

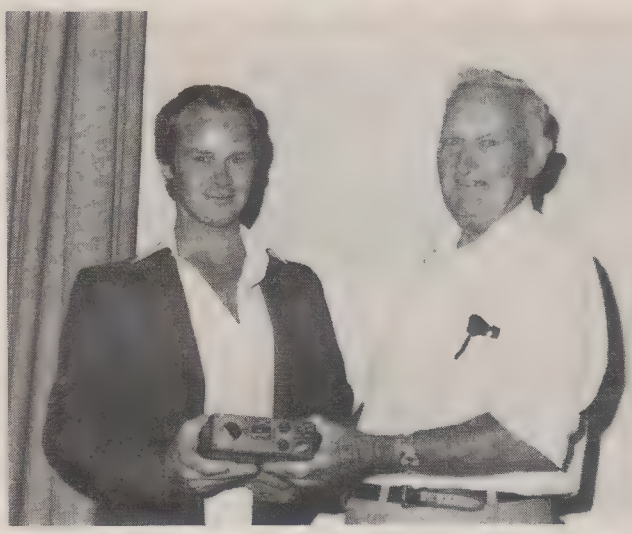

PHOTO 2

★ ★ ★ ★ ★ ★ ★ ★ ★ ★

THE WIRELESS HILL MUSEUM —

FOR OLD-TIMERS AND NEW

Wireless Hill Photos by John Kitchen VK6TU

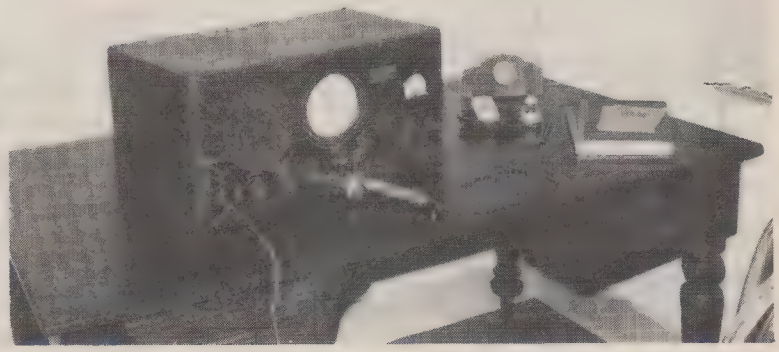

PHOTO 8

PHOTO 4

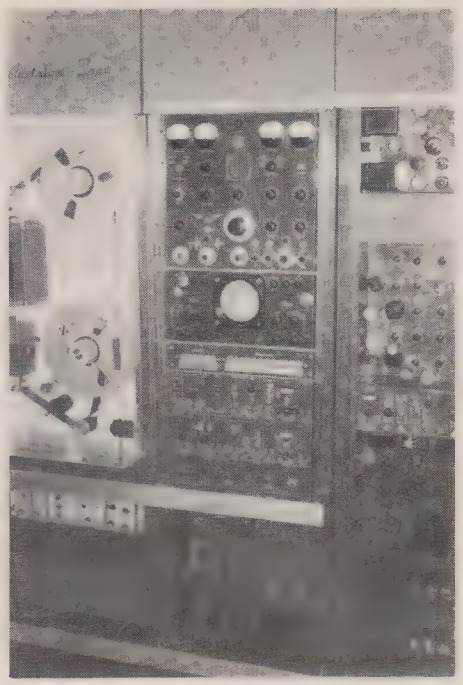

PHOTO 7

PHOTO 9

PHOTO 4: AWA 250W Spark Tx.

PHOTO 5: Collins ART 3 Tx.

PHOTO 6: Transcription Turntable and Rounder Disc.

PHOTO 7: Television Tape Recorder TCA-TRT-18.

PHOTO 8: Traeger Pedal Transceiver.

PHOTO 9: Colour Camera Marconi Mk. VII and Monochrome Marconi 1957.

PHOTO 10: Cyril VK6CR on right receives the Amateur of the Year Trophy and Certificate from Ross VK6DA, VK6 Divisional President, at a recent WA Institute Meeting.

The Wireless Hill Museum is situated on a large hill (of course!) in the Perth suburb of Melville. The antique and younger pieces of equipment were originally collected by the West Australian VHF Group but now are maintained and exhibited by the Melville City Council. The museum is open on Saturdays and Sundays from 2-5 p.m., and admission is only 40 cents — a small price to pay to ensure the history of amateur and commercial radio is there for all to see.

PHOTO 6

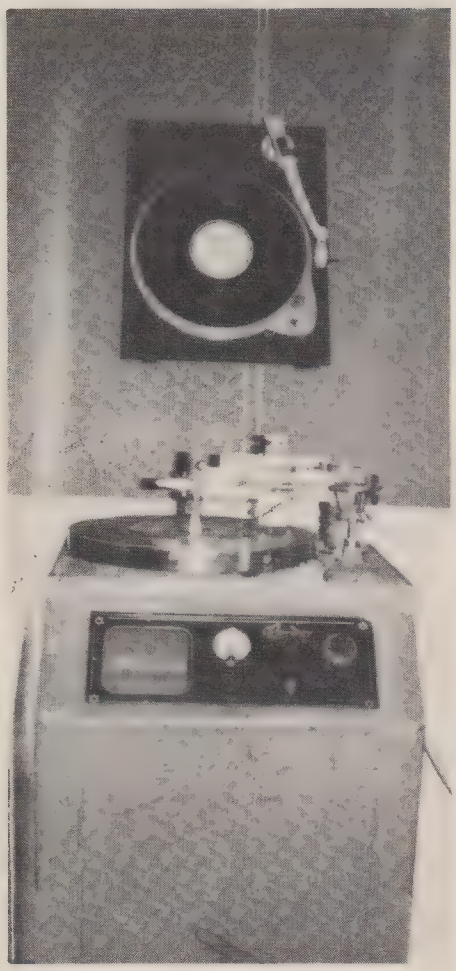

PHOTO 5

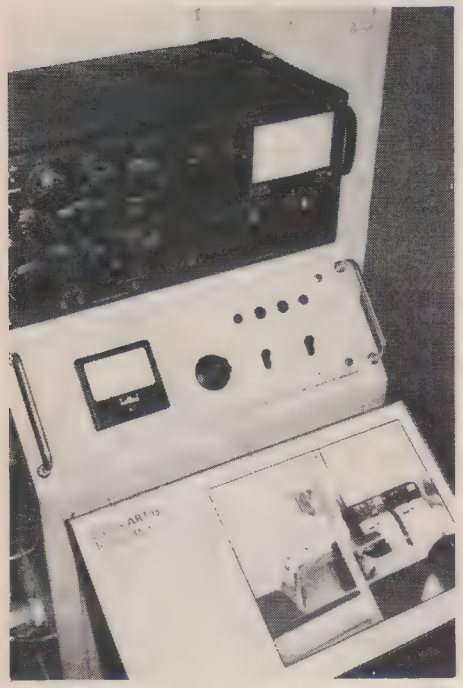

PHOTO 10

NOVICE NOTES

PEAK ENVELOPE POWER MEASUREMENTS

The measurement of Peak Envelope Power (PEP) of an HF radio transmitter is made as follows:—

1. Connect the transmitter to a monitorscope. Connect the monitorscope to a 50 ohm dummy load. Either measure the RF current into the dummy load with an accurate RF ammeter or measure the voltage developed across the dummy load with a VTVM having an RF probe.
   The best way of measuring RF voltage if a VTM is not available is to build the RF probe described in ARRL Handbook, 1974, page 535 and feed it into a Digital Voltmeter having an input impedance of 10 megohms. It will then read accurate RMS volts. In the absence of a monitorscope, a conventional oscilloscope can be used if the pick-up and tuning units described in ARRL 1974, page 399, are built.
2. Tune and load the transmitter.
3. Feed a two tone test signal (two non-harmonically related audio sine waves, typically 1300 Hz and 2300 Hz) into the microphone socket of the transmitter. Adjust the two tone signal level so that, with the microphone gain control in its usual position, the transmitter indicates its allowable continuous cathode current.
4. Adjust the monitorscope for a stationary trace. Adjust the microphone gain until flat topping is observed just to commence. Read the RF ammeter or voltmeter and calculate RMS power from:

   $$W = I^2R \text{ or } W = E^2/R$$
   $$\text{where } R = 50 \text{ ohms}$$

   Then peak envelope power is given by 2 X W.
   Note the amplitude of the trace on the monitorscope graticule.
   Disconnect the two tone generator and re-connect the microphone. Speak. Adjust the microphone gain so that the peaks of the speech envelope do not exceed the amplitude of the two tone trace noted in (3). The peak envelope power will then equal 2 X W and the transmitter will be saturated on speech peaks without flat-topping on splattering.
   Watch the monitorscope constantly while transmitting.
5. Alternatively, where the facility exists to exceed the maximum legal power, proceed as follows. With the two tone generator connected, advance the microphone gain until the RMS power given by I^2R or E^2/R is 200 watts, (i.e.: 2 amps or 100 volt, 50 ohms). Note the amplitude of the two tone trace on the monitorscope. This amplitude should not be exceeded on speech peaks as it corresponds to 400 watts PEP output.
6. If the SWR of the aerial is less than 2:1, the input impedance is in the range 25-100 ohms. If it is 100 ohms, the voltage developed and hence the monitorscope trace will be doubled in amplitude. Decreasing the microphone gain to restore the trace to the same level as on the dummy load will ensure PEP is within the legal limit. If the aerial input impedance is 25 ohms, the possibility exists of emitting twice the legal maximum PEP when the speech envelope peaks are at the correct level on the monitorscope.
   For this reason, it is advisable to use an ATU if necessary to ensure the SWR seen by the transmitter is close to 1:1. Clearly the ATU should be connected downstream of the monitorscope.

Reproduced from a WIA Division Education Bulletin.

REFERENCES:

The Radio Amateurs' Handbook, ARRL 1974, chapters 13 and 17.
Test Equipment for Radio Amateurs, Gibson.
The Amateur Operators' Handbook, P. and T. Department.

INSTRUMENTS REQUIRED

Monitorscope OR oscilloscope, pick-up unit, tuning unit; VTVM with RF probe OR RF probe, DVM with 10 meg impedance. 50 ohm dummy load. Two tone generator OR two equal amplitude audio sine waves.

★ ★ ★

IN THE OM's FOOTSTEPS

VK3NEM is again being heard on the novice bands after a long absence. The operator now is Bob Dickinson, son of Mervyn, the "original" VK3NEM, who qualified for his full call (VK3BGZ) in August 1978. Mervyn took up amateur radio as a retirement interest, and made his presence known in July 1977 using a homebrew rig as described by Rodney VK3UG in a series of articles for AR. He soon became well known in the CW section of 80 metres, where his RAAF background stood him in good stead. Occasionally he could be persuaded to switch his rig to 7 watts AM.

Bob's work situation made it difficult for him to attend classes on a regular basis, and FAMPARC members went out of their way to assist him in his theory studies. He is most grateful for their help and encouragement, and also for the "family" assistance with CW.

Bob operates a modified FT101E from his QTH at Frankston, and although not a real enthusiast for CW, his OM hopes to rectify this in due course! Bob's XYL, Marge, also sat for the November 1979 novice examinations, but failed by only a few marks to pass the theory. Looks like 1980 will see amateur radio becoming a Dickinson "family business". Which raises an interesting question — are there any other instances where a novice call sign has been re-allocated to a grown-up son? ■

Bob Dickinson VK3NEM with OM Mervyn VK3BGZ, ex VK3NEM.

★ ★ ★

OUTBACK AUSTRALIA TRAVELLERS

George Hombsch VK2NXY and Warwick Schofield VK2VBZ hope to continue their successful outback four wheel drive expeditions into the 1980s. Operating FT7s mobile and with inverted Vs at night they welcome anyone to drop in and say hello or just to listen to the progress of their trip this May to Sturt's Stony Desert in the northern part of South Australia. They hope to continue their search for the rare Night Parrot and will also be recording aboriginal ceremonial ground sites.

During their crossing of the Simpson Desert in 1978 many contacts were made on the novice bands, and an interested group of supporters helped us across Sturt's Stony Desert twice in 1979. These included Doug VK5NWT, Peter VK5NWP, Viv VK2VFM, Les VK2NSG, Merv VK7NMP, Bernie VK4NOM, VK5SG and Col VK2CC, among many others.

During the September crossing of Sturt's Stony Desert last year, George had regular contacts from 9.30 a.m. onwards throughout most days with VK7NMP in Launceston on 15 metres mobile.

We know that some SWLs follow these trips also. The next expedition starts on the 3rd May and the most reliable contact is in the evenings on 80m (3.570-3.585 MHz) and on 15m daytime (21.180 MHz), when the driving is not too tough!!

Warwick Schofield VK2UBZ. ■

Outbacking with the Four-Wheel Drive

SIDEBAND ELECTRONICS ENGINEERING

P.O. BOX 23, SPRINGWOOD, N.S.W. 2777
WAREHOUSE 213 HAWKESBURY RD. SPRINGWOOD
TELEPHONE (047) 54 1392

We have cleared our stocks of many lines, and as previously stated it makes sense to buy now from current stocks as due to rising prices overseas and rising import costs, prices are again on the increase. We still have a few Henry Linears and 18-A4T/WB Hy-Gain Antennas in stock at the old prices. Also the Tail-Twister Rotator at $250 and the BT-1A Big Talk Rotator at $85 are good value. We regret the necessity of increasing the price of the new TET HB35C Antenna to $375, however we sold our original order of these antennnas at our previously advertised price of $350 merely to keep faith with our customers — ROY LOPEZ.

HENRY RADIO — A Famous Brand —

NEW LINEAR AMPLIFIERS —

2 KD5 — 2KW PEP, 80 - 10m SSB/CW/RTTY/AM **$1050**
1 KD5 — 1200W PEP, 80 - 10m SSB/CW/RTTY/AM **$850**

ANTENNAS

TET HB35C 5el. Full size Tri Band 10 - 15 - 20m Periodic Yagi 13' boom **$375**
Hy-Gain 18AVTWB 10-80m Vertical **$110**
6'HF Mobile Helical antennas, full range 80m — **$30,** 40m — **$28,** 15m — **$28,** 10m — **$28,** 20m — **$28.**
GPV-5 2m vertical collinear 2 x 5/8 wave **$48**
OSCAR-2-2m mobile ¼ or 5/8 wave complete with gutter mount, cable & plug **$27**
BN-86 balun for beam buyers **$20**
HY-Q (USA) 50-ohm 1KW balun **$15**

ROTATORS & CABLES

All rotators now come with bottom brackets and control-indicator boxes wired
KEN KR-400 medium duty **$120**
KEN KR-500 vertical rotator **$140**
KEN KS-065 stay/thrust bearing **$25**
CDR BT-1A light duty 4 position push button programmable. Plus normal operation 120V AC **$85**
CDR Ham III heavy duty 120V or 28V AC **$200**
CDR tail-twister extra H/D120V or 28V AC **$250**
RG-8U foam coax cable, per metre **$1.00**
8-cond. rotator cable, per metre **75c**

ACCESSORIES

Chrome base and spring for mobile antennas **$20**
Chrome Asahi bumper mount **$8**
240 18V AC transformer **$10**
Mobile bumper mounts 3/8" 24 thread **$2**

KYOKUTO FM-2016A

800 channel, 2 meter FM transceiver with 4-channel memory and scanner 15W **$340**

TRIO-KENWOOD PRODUCTS

TS180S 10-160m HF solid state transceiver ..... **POA**
TS820 and TS520S HF 10-160m transceivers ..... **Special POA**
TS120S and TS120V 10-80m transceivers ..... **POA**
TS700SP 2m all mode transceiver ..... **Special POA**
TR7200G 2m mobile transceiver ..... **Special POA**
TR7625 and RM762m transceiver plus scanner ..... **Special POA**
VFO 520 for TS 520S **$130**
LF 30A low-pass filter **$30**
SP 120 — SP 100 Remote Speakers **$32**
DK 520 adaptor TS 520 to DG 5 ..... **$10**

All further Trio-Kenwood accessories and transceivers at competitive prices.

CO-AX CONNECTORS

PL-259, SO-239, cable joiners, each **60c**
Right angle and T-connectors, each **$1.00**
GLP right angles RG-58U to SO-239, w/lock nut and cap, each **$1.50**
Double female connectors, each **60c**
MLS right angles RG-58U to PL-259, each **75c**
In-line mike sockets 3 & 4 pin, each **60c**
Mike sockets 3 & 4 pin, each **60c**
M-ring body mount w/lock-nut **$1.50**

NOVICE SPECIALS-TRANSCEIVERS

CONVERSION CRYSTALS for-amateur licence holders - set of 8 crystals to convert 23-ch, 27-MHzCB units to 28 MHz. Suitable for Kraco, Sideband, Universe, Hy-range V etc., converts as per Universe 10M above — CRYSTALS & INSTRUCTIONS **$32**
Set of 4 crystals converts to 28.3-28.6 MHz **$15**

All prices are NET, ex Springwood NSW, on pre-payment with order basis. All risk insurance is free of charge, allow for freight charges by air, road, rail or postal, excess will be refunded. Prices are subject to change without prior notice. All orders cleared on a 24-hour basis after receipt of order with payment.

ROY LOPEZ (VK2-BRL) Manager

VHF-UHF
An expanding world

Eric Jamieson, VK5LP
Forreston, S.A. 5233

Freq.	Call Sign	Location
50.005	H44HIR	Honiara
50.023	HH2PR	Haiti
50.025	6Y5RC	Jamaica
50.035	ZB2VHF	Gibraltar
50.036	HC1JX	Quito
50.038	FY7THF	French Guiana
50.040	WA6MHZ	San Diego
50.040	ZS6VHF	Edenvale
50.048	VE6ARC	Alberta
50.050	ZS3E	South West Africa
50.060	PY2XB	Sao Paulo
50 080	W1AW	Connecticut
50.080	TI2NA	Costa Rica
50 088	VE1SIX	New Brunswick
50.100	KH6EQI	Pearl Harbour
50.110	JD1YAA	Marcus Island
50.498	5B4CY	Cyprus
51.999	YJ8PV	New Hebrides
52.200	VK8VF	Darwin
52.250	ZL2VHM	Palmerston North
52.300	VK6RTV	Perth
52.350	VK6RTU	Kalgoorlie
52.400	VK7RNT	Launceston
52.440	VK4RTL	Townsville
52.450	VK2WI	Sydney
52.500	JA1IGY	Nagoya
52.510	ZL2MHF	Mt. Climie
52.800	VK6RTW	Albany
52 900	VK6RTT	Carnarvon
53.000	VK5VF	Mt. Lofty
144.010	VK2WI	Sydney
144.400	VK4RTT	Mt. Mowbullan
144.475	VK1RTA	Canberra
144 500	VK6RTW	Albany
144.600	VK6RTT	Carnarvon
144 700	VK3RTG	Vermont
144.800	VK5VF	Mt. Lofty
144.900	VK2RTX	Ulverstone
145.000	VK6RTV	Perth
147 400	VK2RCW	Sydney†
432.400	VK4RBB	Brisbane

The beacon list has been modified this month, and includes only 24 hours a day operational beacons, i.e. permanent beacons. The full list was published in February 1980 AR, and March carried some alterations. Bill W3XO advises of a beacon YV5ZZ in Caracas, Venezuela, believed operating on 50.070, but no other details whether 24 hours a day.

Barry VK2AAB writes to affirm that VK2RCW is still operating as a beacon on 147.400, running 8 watts to a 5/8 wavelength ground plane on a 40 foot mast 600 feet a.s.l. Except for a few brief periods, the last one due to a lightning strike, it has been a continuous operation for about a year. They look for reports on the coverage given, and find it a very useful training facility. The beacon is therefore relisted this month.

It seems there is still some confusion over the VK5KK beacon running on an attended basis on 52.150. The Geelong Amateur Radio Newsletter speaks very severely about the VK5s not conforming to the proposed band-plan for beacons! Let me assure all and sundry there are no immediate plans to fiddle with the existing VK5VF beacons, the VK5KK beacon is purely an experimental beacon utilising a beam antenna with no particular pattern of beam headings, but which has proved useful for overseas stations because it runs more power (ERP) than VK5VF and is thus being heard over greater distances. I suggest those in doubt refer to the reference in last issue re this particular beacon!

OPERATIONS FROM HONG KONG

Anthony VS6EZ writes from Hong Kong with some corrections to previously published information regarding operations in that country. The following from his letter should be of interest to readers.

VS6HK is the club call sign of the Hong Kong Amateur Radio Transmitting Society, and is being used as a morse ident on their own 2 metre repeater in Kowloon, operating channel RO, 145.000 MHz input, plus 600 kHz output.

The Microwave Module Transverter 2 metre input and 6 metre output was made at Anthony's suggestion, and has worked very successfully on his usual frequency of 50.150 MHz, giving 10 watts PEP or 10 watts FM. However, the prototype power output drops to 2 or 3 watts at 52.100 MHz which is the highest out of band spot frequencies they are permitted. He occasionally runs a cassette tape which has one minute of CQ, advising he is listening on the frequency he is transmitting on, almost always 50.150, occasionally 52.100, and that he is also listening on 28.490 MHz. After the one minute there is a ten seconds silence to let the VOX drop out and for him to listen, then the call starts again.

Procedure is to switch the rig on at 2300Z and set the RM3 scanning and go back to bed with an ear open for any signals. Switch off is at 0030Z when he leaves the office. Evening operation whenever possible. For VK operators Anthony suggests listening for an opening up north, then look for him on 28.490 or 21.150 which are the two preferred frequencies. He is prepared to work cross-band 6m to 10 or 15m, or between 50.150 and 52.150, or if it is at all possible direct on 52.100, but with only 3 watts it will be difficult.

In Hong Kong there are only a few 6 metre stations, VS6FX with a 551, VS6BF with a 551, VS6EG and VS6GW also have equipment but have not been heard on. Anthony appears to be the only station using a beam, a 5 element, while the other two stations listed use groundplanes. At the time of writing Anthony had not worked any further south than KG6DX and KH6JSG, lots of JAs on 25-11, less on 5-12, 6 JAs on 23-12 and nothing since!

What all the above means simply is that VS6 will be a rather difficult place for VK to contact, but we will live in hope!

CAIRNS REPEATER

Ted VK4YG writes to advise the Cairns Amateur Radio Club's 2 metre FM repeater VK4RCA on Ch. 48 is now operational at the TV station site on Mt. Bellenden Ker, coverage so far has exceeded expectations, with contacts to Mackay, mobile/mobile, Cairns/Townsville, etc. The site is about 30 miles south of Cairns and the antenna is about 5200 feet ASL.

Technical direction for the project was by Ian Champion VK4AWB (ex VK5WB), who having completed the project is now moving to Brisbane!

QUEENSLAND 2 METRE RECORD

In October 1979 AR I mentioned receiving advice of a contact between Ken VK4VC and an unnamed station to set a Queensland 2 metre record. Ken has written to say the other station was ZL2BFC, so we can now give due recognition to the record making contact, conducted over 2571.628 km. Congratulations to both parties.

MOONBOUNCE REPORT

Lyle VK2ALU reports in "The Propagator" that it is two years since VK2AMW had to cease EME operation due to vandalism of equipment. Further details for re-location were finalised with the University before Christmas, and it is hoped 1980 will see the station at its new EME site.

The additional receiving and feed equipment needed for the dish to be also used as a radio telescope is well on the way to completion. Some sections have been tested.

Tests were carried out on the dual band disc feed system at the antenna test range in December and confirmed it is a viable arrangement. The focal point relationship of each of the 432 MHz and 1296 MHz feeds proved to be coincident, a few centimetres in front of the 1296 MHz radiating disc. The polar diagrams showed the average radiation pattern most suits a dish of approximately f/d of 0.55. Details are being forwarded to interested EME groups who operate or plan to operate on both 432 and 1296 MHz.

MICROWAVE NEWS

Lyle VK2ALU also reports that VK2 lost its most competent and enterprising microwave experimenter when Des Clift VK2AHC moved to Adelaide in December. His new QTH is believed to be a very good UHF site!

An over-the-water 3 cm propagation test was recently made between VK2ALU at Currarong (Jervis Bay) and VK2YCN, some 200 km north at Norah Head. Bad weather, with wind and cloud prevented the necessary duct forming to support propagation. However, valuable information was gained on the special problems associated with an over the horizon path over water. The equipment was located at the water's edge at both ends of the path.

DISRUPTIONS TO COMMUNICATIONS

"Technical Review" No. 65 mentions the US National Oceanic and Atmospheric Administration predicts major disruptions to radio communications particularly in the 3 to 30 MHz band, in 1980, due to an upcoming intense period of sunspots. The sunspot activity is expected to peak in March 1980. Related geophysical disturbances such as solar flares and ionosphéric storms can also be expected. If the prediction is accurate, the 1980 cycle will be equal to the second most severe cycle observed over the past century.

If the above proves to be correct, then it looks like the March/April equinox for 1980 will be a good DX period for VHF and 6 metres, so with the final closure of Ch. 0 on Sunday, 24th February, maybe the powers that be will be far-sighted enough to allow VK amateurs to use all or some portion of the 50 MHz band, thereby giving us an opportunity of working a greater proportion of the 6 metre DX so readily available in the northern hemisphere.

GEELONG BEACON

Daryl VK3AQR has advised some details of the Geelong 6 metre beacon which it is hoped will be an indicator for openings to VK3, is likely to be fully operational by the time you read this, operating on 52.330 MHz from Mt. Anakie, 20 miles north-west of Geelong. Antenna two crossed dipoles stacked, running 25 watts initially, but eventually 80 watts, call sign VK3RGG. Now that Ch. 0 has disappeared from the Melbourne scene we will need something to alert the clan of possible openings! It is understood the beacon will FSK ident 850 Hz shift at 9 w.p.m.

PORT LINCOLN NEWS

Tim VK5ZEV sends some news indicating a good VHF site by the range of workings both via repeaters and direct. On 14-1-80 at 0955Z Ch. 47 Mt. William provided contacts to VK3YEE Melbourne, VK3ATN Birchip and VK3BZJ/P Phillip Island. The latter station was heard direct but too noisy to work.

On the same day from 1230Z again via Mt. William VK3AGD, VK3NK, VK3BFF, VK3YND, VK3ZAU and VK3ZQB, signals 8 uV from repeater. Tim's signals were also triggering the Canberra repeater at the same time. On 15-1 VK3AGD and VK3NK via Ch. 42 Pt. Pirie; 24-1 VK6WG via Ch. 48 Adelaide; 23-1 VK3ZRV/5 first on Ch. 45 Adelaide, then direct on Ch. 50 and finally via Ch. 42 Pt. Pirie. Distance from Pt. Lincoln to Adelaide 270 km and the same to Pt. Pirie.

The Pt. Lincoln area is not one to be well represented on VHF and I hope Tim will be able to operate on SSB as well as FM in the future as there will surely be some good opportunities to work from there.

VHF/UHF RECORDS AGAIN BROKEN

For the fourth successive year Dr. Walter J. Howse VK6KZ has continued his exploration of the VHF/UHF propagation between south-eastern Australia and the south-west of Western Australia. Commencing in December 1976 in Albany on 144 and 432 MHz, his tests have taken him in December 1977 to Torbay Hill, 20 km west of Albany; in January 1979 to Walpole — a further 65 km west, and now in January 1980 to Cape Leeuwin — the most south-western point of WA.

During this time a world record was established by him on 432 MHz from Torbay Hill — but this in turn was broken six weeks later by Aub Keightley VK6XY in Albany, and that in turn was exceeded more recently by contacts between Hawaii and California; the world record on 1296 MHz was extended from Walpole and now further contacts from Cape Leeuwin are the basis of claims for a new world record. The latest expedition also resulted in contacts on 144 and 432 MHz to be submitted for new Western Australian and Australian records respectively.

Following a close study of synoptic weather patterns and liaison with the Perth Meteorological Bureau, Dr. Howse set forth from Perth on Tuesday afternoon, 22nd January, 1980. At that time, the long wave pattern in the Southern Hemisphere comprised four waves with features of importance in the Australian region, being troughs located near 85 degrees east and 170 degrees east and a ridge near 130 degrees east. The Melbourne Bureau stated that these features, along with other elements of the long wave pattern, appeared to be oscillating about these positions and that continued anti-cyclonic activity at central to eastern longitudes was expected.

On arrival at Cape Leeuwin at 1230Z, the Adelaide 144.8 MHz beacon was audible at good strength but no contacts were made (apart from successful QSOs with Don Graham VK6HK in Perth over a 271 km path on 144 and 432 MHz) until 1428Z when VK5NX and VK5ZB — both mobile — were worked via the VK5RHO repeater in Adelaide on 146.85 MHz.

At 2032Z two-way SSB communication was established with Reg Galle VK5QR on 144 MHz. Thirteen minutes later, VK5QR was heard on 1296 MHz SSB but a two-way contact did not eventuate until 0057Z when signal reports of 53/53 were exchanged. This contact over a 2148 km path with two-way SSB exceeded the previous world record distance of 2107 km. In the interim, contacts were made by VK6KZ with VK6WG and VK6KJ in Albany (260 km east), VK6QA and VK6XQ in Geraldton (616 km north), VK6HK in Perth, and with Ken Yates VK5RP in Adelaide. Ken's 1296 MHz SSB signal was also copied at Cape Leeuwin but no reports exchanged.

Also at about 0000Z Wednesday, 23-1, VK6KZ became aware of the opening between Perth and Adelaide on 144 MHz, which was the first to result in contacts ince February 1952. The circumstances of these contacts are themselves very interesting and gave evidence of the advantages and disadvantages of the calling frequency of 144.100 MHz. In summary, at 2300Z on 22-1 (0700 Wed.), VK6KZ told VK6HK on of the strong 2 metre signals from Adelaide. VK6HK looked carefully for the Adelaide 2 metre beacon and heard it. Don alerted a number of other Perth amateurs by telephone and together they frantically sought activity from Adelaide. Several phone calls to Adelaide went unanswered. Aub VK6XY in Albany was contacted by Wayne VK6WD and Aub triggered the Adelaide FM repeater. The net result was the emergence of a new licensee, Les Wood VK5ALW. The honour of the first Adelaide-Perth contact for nearly 30 years went to VK6WD, who worked Les at 0003Z. Contacts were also made by Jack VK6ZEL, Ron VK6FM, Phil VK6ZKO. Ironically, Don VK6HK did not copy his report from VK5ALW due primarily to QRM on 144.1 from stations in Albany and Denmark. Here was an occasion where stations with a favourable path would have helped by shifting away from the calling frequency to leave that free for stations trying the more difficult path.

The opening to Perth appeared to close at 0110Z and to VK6FM 45 km south of Perth at 0230Z. The Perth-Adelaide distance is 2129 km. Ken VK6ZFQ, at Katanning, 250 km south-east of Perth, worked into Adelaide also. At 0025Z on 23-1 he worked VK5ALN on SSB over a 1933 km path. (Ken had two further contacts during the opening, viz., at 1255Z with VK5RO and 2305Z with VK5LP.) He reported hearing VK6KZ/P working VK5s without hearing the other end of the QSOs.

In the meantime VK6KZ/P at Cape Leeuwin ceased operating at about 0230Z in order to have breakfast — anyway the Adelaide beacon was fading! Activity was resumed at 0800Z with VK5VF at good strength. A number of 144 MHz contacts were made with stations in locations as diverse as VK5MC in Mt. Gambier (actually Hatherleigh, near Millicent), Adelaide, Albany, Perth, Geraldton, and at 1035Z with Andy VK6OX, 1056 km north at Carnarvon. At 1000Z Chris VK5MC was heard on 1296 MHz and VK6KZ/P was heard by VK5MC. An exchange of reports, however, was not achieved until 1200Z with reports of 519 to VK5MC at 43/42 received from Chris. This distance of 2290 km is being claimed as the world record for the 1296 MHz amateur band.

At 1036Z the first VK3 station was heard on 144 MHz and worked were VK3OT, VK3BPM, VK3AXV, VK3YLR/P, VK3YII and VK3ZBJ. The contact with Andrew VK3YLR/P at Ross Hill, 80 km east of Melbourne, is the basis of claims for new Western Australian and Victorian records for 144 MHz. Distance 2785 km. Although Andrew heard VK6KZ/P on 432 MHz no contact resulted. However, at 1337Z VK3ZBJ was worked on 432 MHz over 2717 km for a new claimed Australian record.

The following morning saw band conditions deteriorate with the last DX contact by VK6KZ/P being one with Eric VK5LP at 2221Z on 23-1, i.e. 0621 hours local time on Thursday, 24-1-80.

Equipment used by VK6KZ included a modified Kenwood TS120V transceiver at 28 MHz with microwave module transverter for 144 and 432 MHz and 10 watt power levels on these bands. The 1296 MHz SSB was obtained by processing a 21 MHz SSB source as described by Reg VK5QR in AR for October 1979. Power output on 1296 MHz was about 4 watts fed to a 1 metre parabolic dish mounted above the car. The receive converter comprised two BFR91 RF amplifiers head of a microwave modules converter. Antennae for 144 and 432 MHz were 5 and 7 element yagis respectively.

This opening to the Eastern States was one of the few to be observed simultaneously from such diverse locations in the south-west portion of Western Australia. It rekindled hope in Perth amateurs that the path to Adelaide will be accessible to them. It also showed that the summer ducting in the Bight can extend as far west as Cape Leeuwin. It now appears that it will be up to Victorian amateurs to explore the extent of the ducting at the eastern end of the path, or will the optimism of Brian Tideman VK5TN expressed in 1968 of the possibility of a VK5/6 path to South Africa on 144 MHz be borne out by systematic tests? . . . Anyone wanting to explore 576 MHz across the Bight please contact VK6KZ!

I thank Walter VK6KZ for the fill in of complete information on the extensive openings across the Bight this summer; the details so given should surely whet the appetite of many an amateur, and hopefully spur him on to share in these great experiences. When one considers that only 10 watts was being used by VK6KZ it shows the extent and strength of the ducting — it seems incredible I should work him through my 30 dB attenuator (hill) at the time when conditions were failing. Just incredible! If nothing else it proves the pair of stacked 13 element yagis are working!

MORE NEWS FROM HONG KONG

Graham VK8GB has sent a note confirming the information already mentioned in regard to Hong Kong activity, but adding further that Tony VS6EZ on 20-8-79 contacted on 144.120 FM YD3KJ, YD3BEV and YD3BJN between 1408 and 1502Z. He ran the IC211 via along length of RG58 to a vertical dipole! The stations are located in Surabaya, Indonesia.

Tony VS6EZ is keen to work VK on 6 metres, so it will pay to keep a lookout during March-April at least. Graham also mentions VS6BF, who has an IC551 and ground plane and is soon to sell his gear to VS6CW!

THE NORTHERN HEMISPHERE

From Bill W3XO and "The World Above 50 MHz" comes news of continuing 6 metre activity in their hemisphere. Some drop off was recorded during the second half of December 1979, but the last few days of 1979 saw an improvement to the extent FY7AS was worked by many eastern US stations, plus contacts to HC1JX and JA1PIG/PZ, all around 1300Z. In early January Es conditions prevailed with numerous double hop contacts across the USA. What is unusual is that the Es was so intense it allowed contacts to be made on 144 MHz as well, with 13 US States being worked. Similarly, on 70 cm band conditions between 27-12 and 29-12 were so good that many extreme distance QSOs took place, reminiscent of summer type tropo openings.

With the continuing lengthening out of distances in the USA it looks like the VK3 gang are going to need to make special efforts soon to work to Albany and further west on 1296 MHz and higher bands so as to ensure the world records stay in Australia; there are no places left in VK5 to make contacts much longer, so it's over to VK3 and possibly VK7.

That's all for this time, the bands have been relatively quiet so news becomes scarce under such conditions. Closing with the thought for the month: "In the game of life, as in other sports, you can pick out the winners — they're the ones who aren't complaining about the officiating."

73. The Voice in the Hills.

FOOTNOTE

The KH6 EQI beacon on 50.099 was heard in Melbourne (2-3-80) in the evening for approximately one hour. KH6NS was worked from both VK7 and VK3 on 52.05. Openings also occurred from W and ZL on the weekends of 23-24 of February and 1-2 of March. ■

STOLEN RADIO EQUIPMENT

Amateur Radio Equipment stolen from G. Lee-Manwar VK4AML, 44 Webb Street, Stafford, Brisbane 4053. Ph. (07) 356 3807 AH, (07) 275 7483 Bus.

1. **YAESU FT101E** transceiver **S/N 6K211310** (plus Philips microphone).
2. **ICOM IC-701** transceiver **S/N 8003943.**
3. **ICOM IC-701PS** power supply **S/N 7804238.**
4. **ICOM IC-211** transceiver **S/N 6805458.**
5. **ICOM RM-2** remote control unit **S/N 02785.**
6. **KEN KP-12 RF** speech processor **S/N TK603200.**
7. **PALOMAR 2M50** 2m linear amplifier, no S/N but **can be recognised internally by additional receiver preamplifier board and relay mounted inside.**
8. Power supply, DC regulated 10-20V DC, 0-20A, built-in light grey rack mounting box with heavy aluminium front panel with chromed handles. Fits 19 inch rack. Distinguished by large 0-30V meter and 0-25A metres on front panel and 3 pairs of red and black output sockets on bottom of front panel. Two large 6 inch black anodized "Minifin" heatsinks containing four 2N3055 transistors mounted (insulated) on top of box.

If any of the above items are seen, please inform the nearest police station and ask them to contact the Fortitude Valley CIB (Brisbane).

☆ ★ ☆

Amateur Radio Equipment stolen from Barry Wilton VK3NXX, 30 Melby Avenue, Balaclava, Victoria 3183. Ph. (03) 697 6230 Bus., (03) 527 4029 AH.

1. **FT200 Tcvr,** Serial No. **IF 320354.**
2. **FV200 Ext. VFO** (internal mods, 2 xtals fitted).
3. **FP200 Power Supply.**
4. **Turner Desk Mike** (internal mods — Hi, Imp XFR,etc.).
5. **CPI Preamp** (27-28 MHz — mod. 3.30 MHz).
6. **Digital Clock,** home-brew (Tandy case MA 1003 chip).
7. **Home-brew 6/20V 30A Power Supply** (C & V meters 2 in., 2 outputs, Horwood case, black).
8. **Diawa Rotator Control Unit.**
9. **Linear Amp,** home-brew, not complete. 2 3/500Z, PS, minus 2 RF chokes and ant. relay, single cabinet.

If any of the above items are seen, please notify your nearest police station or Senior Detective Murray Aldred, Elsternwick CIB. Ph. (03) 528 5966.

LETTERS TO THE EDITOR

Any opinion expressed under this heading is the individual opinion of the writer and does not necessarily coincide with that of the publisher.

PO Box 11, Woomera, S.A. 5720.
24th November, 1979.

The Editor,
Dear Sir,
Hoping not to bore anyone with the details, may I add a final postscript to the saga of the DX-pedition which never came off, the Ghan Railway Mobile DXpedition?

I am prompted to do this as a result of people still asking me over the air what happened — really happened, that is!

Frankly I am appalled at bureaucracy's lack of courtesy, as I have written to them twice and they have seen fit to ignore both letters, although they could legitimately have been written in much stronger language.

As far as I am concerned, the matter is now closed. I would like to thank the VK5 and VK4 divisions of the WIA for printing my comments on the non-event, and the VK2-VK7 divisions for putting to air the tapes which I sent them afterwards explaining in a cool, calm and collected manner (which was not the way I felt!!!) the reasons for cancellation.

In closing it would appear that I may have erroneously conveyed the impression in my letter to the Editor published in October (AR) that the local radio club had, as an organised body, approved the canvassing of support. Although the matter was in fact tabled at a meeting, and discussed informally with individual members and officers, and the draft of the item printed was on the club notice board for a couple of weeks before I sent the other copies out, it appears that it could be interpreted that I had said that they endorsed my comments as a club. I would like to make it clear this was not so, and not the impression I wished to convey.

Yours faithfully,
C. R. W. Ashton VK5DQ. ■

17-12-79.

The Editor,
Dear Sir,
It would be appreciated if this text, or an edited version, is included in the next possible issue of AR.

Unfortunately, in the early hours of 14th December, the Gold Coast Amateur Radio Society's VHF/UHF repeater VK4GC was struck by lightning during a violent electrical storm. In this strike: (1) The mains power lead earth wire vapourized; (2) The mains power plug blew out of the wall; (3) The transistors in the power amplifier melted and their caps blew off. I could go further but suffice to say that the repeater is not expected to be operational until February-March when a new repeater is completed. Any donations towards the construction of the repeater would be very appreciated. Donations may be sent to GCARS Secretary, PO Box 588, Southport 4215, Qld., and are payable to the "Gold Coast Amateur Radio Society".

Yours faithfully,
Glenn Wallace VK4NUX, GCARS Secretary. ■

340 Gillies Street, Thornbury 3070.
24-12-79.

The Editor,
Dear Sir,
The story published in December 1979 AR concerning Australia's first qualified woman electrical engineer and the first licensed woman amateur radio operator, Mrs. Florence McKenzie, O.B.E., brought to my mind recollections of another "upfront" female Mac, viz., Miss Madeline Mackenzie ex-VK4YL (prewar). Like ex-VK2FV, Madeline, in my opinion, has a claim to fame also, because when she obtained her AOCP in the early thirties, she was only 11 years of age, and as far as I am aware, is the youngest Australian licensed amateur radio operator ever. She specialised in CW and was a leading DX and contest operator as such. By post-war she had married and never returned to the amateur radio scene thereafter.

Yours faithfully,
Eric Trebilcock L30042. ■

71 Lonsdale Avenue, Berowra Heights 2082.
26-1-80.

The Editor,
Dear Sir,
Apparently there is a group of amateurs who do not wish to have their call sign and QTH listed in the "Call Book".

The accuracy and completeness and, of course, the usefulness of the Call Book will be considerably reduced if it doesn't contain **all** amateur call signs. How is an operator to determine if a station is not a pirate if it's unlisted?

If the objection is based on organisations using the book as an advertising mailing list so what, no obligation exists on the recipient to acknowledge, read or purchase or other act on the received material.

I'm sure fellow amateurs would appreciate the Editor compiling a summary of the argument(s) submitted by this group supporting their case, as obviously they would wish to remain anonymous.

73. Stan Dogger VK2VFW/ZRD. ■

P.O. Box 151, Mannum, 5238, S.A.
29-1-80.

The Editor,
Dear Sir,
I was talking to a very good "DX friend" on air before Christmas who said he would be travelling abroad as a representative of his firm.

Imagine the surprise and delight on receiving a picture postcard — very cosmopolitan — a German card, posted in England, by a Japanese, to a Pomme, living in Australia!!

My very good friend is Shiro JE2EFQ.

It really makes one stop and think. What a nicer world this would be if world leaders could be like "Hams" — no colour, religion or politics — just good communications between everyone regardless of who you are, where you live or what language you speak.

88s from Pat Edmunds VK5NPA. ■

10 David Street East, Springwood 2777.
17th February, 1980.

The Editor,
Dear Sir,
I understand that WARC 79 has produced suggestions for additional Amateur Service bands on 10 and 18 and 24 MHz. I believe that 24 MHz is already subject to invasion and usage by illegal stations that have "spilled over" from the chaotic 27 MHz CBRS on the specious grounds that sensible users of CB have been forced to move to unauthorised channels because of overcrowded conditions and "idiot usage" by 27 MHz CBers.

I support any move that would confine Amateur Service operating on 24 MHz to either "FULL AOCP" holders only OR to any "above AOCP" category that may be introduced. The almost certain "struggle for 24" would require capable and experienced Amateur Service members, who could be organised by Institute leadership to present the maximum opposition to illegal occupancy and invasion by "CB pirates". I suggest, too, that the Institute should take urgent steps to counter the present NCRA campaign to retain 27 MHz in 1982 and to frustrate the Federal Government's stated intention to move CB to UHF and to return the 11 metre band to the Amateur Service.

Most amateurs with whom I have discussed these matters are quite apathetic about the whole business, necessitating STRONG Federal and State leadership to get our members motivated to slogging out the issue toe to toe with the CBers, who have made an appalling mess of the 11 metre "loan". However, what they lack in technical competence and worthwhile usage of our former band, they seem to compensate in insatiable demands, financial interests, captive media, vote-seeking politicians and irresponsible business support. Many amateurs are willing to "let 27 go" and to accept the successful CB CONSPIRACY as a "fait accompli". However, the methods used by the pirate invasion and BIG BUSINESS machinations suggest that the WIA should be committed to pushing hard to regain our ill-lost frequencies and not to pursue a policy of lying whimpering in the corner. The politicians sold us "down the river" and should not be allowed to forget it. The Amateur Service, with its long and proud record of public service and community advantage SHOULD have been protected by our political leaders from the incursion of the pirates and the conspiring of the Big Business interests foisting the CB MONSTER on to the community.

Yours faithfully,
R. C. Black VK2YA. ■

"Bonnie Braes",
Wattamondera, NSW 2741.
18th February, 1980.

The Editor
Dear Sir,
I have read with interest recent letters and comments in other publications regarding the plight of "home-brewers" and I am glad to learn that my problems finding parts are not unique.

What is the WIA doing about this situation?

Apart from the unadvertised (WHY?) "Magpubs", which shows considerable savings can be made, I know of no service to provide amateurs with parts, equipment or even those illustrious "Black Boxes".

Do we prefer to see others make the killing?

We have a QSL Bureau. Why not a parts and equipment Bureau?

How about a survey on amateurs' needs?

There is much that can be said on this issue but — what do YOU think?

Yours faithfully,
Graham L. Dun.

EDITOR'S NOTE:

1. We certainly would appreciate our members assistance in compiling such a register/bureau. Do we have ony offers? Please write to your Division if you can be of any assistance in this regard.
2. Magpubs details are published at regular intervals in AR.—VK3UV. ■

MAGPUBS

A WIA MEMBERSHIP SERVICE

OVERSEAS MAGAZINE SUBSCRIPTIONS

(One year only)

QST	$19.00
Radio Communications	$19.00
Break-In	$12.00
Ham Radio ($28.50 for 2 years)	$15.50
CQ ($21.50 for 2 years)	$13.50
CQ-TV	$5.50
VHF Communications — Surface mail	$8.20
Airmail	$12.40
(Binders $2.75, plus 50c P & P)	
AR — Overseas surface mail subscription	$14.40

Write to

MAGPUBS

P.O. BOX 150
TOORAK, VIC. 3142

AWARDS COLUMN

Bill Verrall VK5WV
7 Lilac Ave., Flinders Park, S.A. 5025

Here are the details of two new awards which are now available for working amateur stations located at Alice Springs, Northern Territory.

THE REVEREND JOHN FLYNN MEMORIAL AWARD

This award has been instigated by the Alice Springs Community College Radio Club in memory of the Reverend John Flynn, who was the founder of the Australian Inland Mission, the Royal Flying Doctor Service and radio communications in general in "Outback Australia". Today, thanks largely to the efforts of John Flynn, every cattle station and settlement in the Outback has radio communications.

Flynn spent his whole working life in the Outback helping others, no matter what nationality or colour.

This year, 1980, is the 100th year since the birth of John Flynn and the Alice Springs Community College Radio Club has printed 2,000 certificates in memory of this great man.

The conditions for obtaining this special award are as follows:

VK Stations: 3 contacts with Alice Springs Club members.

Overseas Stations: 2 contacts with Alice Springs Club members.

All SWLs: 3 reports of QSOs undertaken with Alice Springs Club members.

ALL BANDS — ALL MODES.

The award commenced at 0001Z on 1st January, 1980.

Each certificate will be individually numbered and signed by the Awards Manager of the ASCCRC.

The cost will be $3 Australian or equivalent in IRCs (10), which includes return of the certificate by airmail.

Log details only are required and shall include the date, Time (GMT) and stations worked, signed by two other licensed amateurs. Contacts 24 hours apart with the same stations are permitted.

ALL FUNDS GENERATED BY THIS AWARD WILL BE DONATED TO CHARITY.

This award is one of a kind and the ASCCRC hopes that it will be treasured by the 2,000 people lucky enough to obtain it.

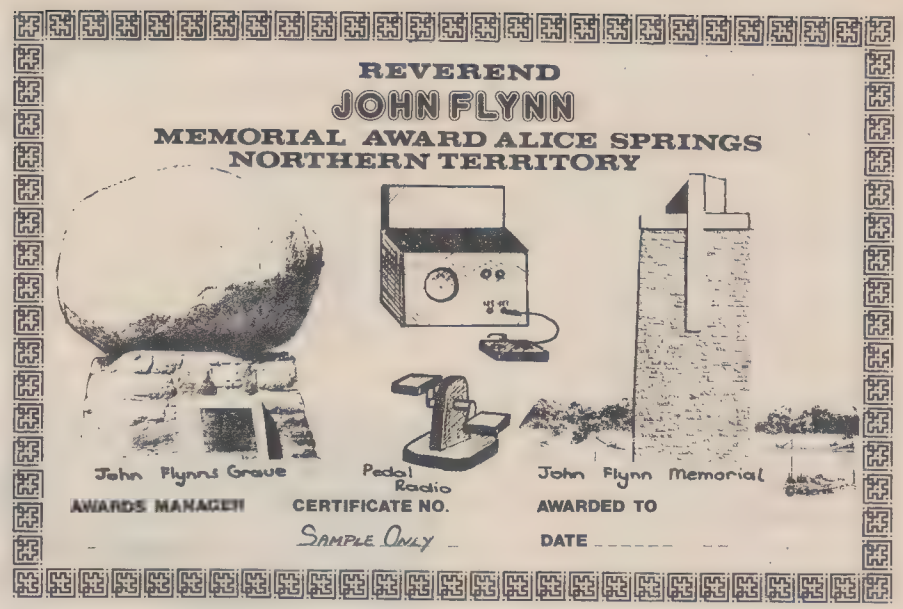

Applications for the award should be addressed to:—Awards Manager, ASCCRC, PO Box 2953, Alice Springs, Northern Territory, Australia 5750.

The award measures 255 mm x 175 mm, printed on high quality white card with surround and "John Flynn" in gold and the remainder in blue.

OUTBACK AUSTRALIA AWARD

This is a perpetual award also issued by the ASCCRC. The rules of the award are:—

1. The award is available to all amateurs and SWLs.
2. Any band, any mode.
3. The commencement date for this award was 1st December, 1979.
4. Stations contacted for this award must be members of the ASCCRC.
5. GCR rules shall apply, i.e. log details certified by two other licensed amateurs.
6. Requirements: VK stations and VK/SWLs — contacts with 6 stations. Overseas stations and overseas SWLs — contact with 3 stations. Endorsements are available for contacting extra stations as under — VK and SWL, 4 extra stations (total 10); overseas and SWL, 3 extra stations (total 6).
7. The cost of the award and endorsements for VK applicants is $2 and for overseas applicants is $2.50 (or equivalent in IRCs).
8. Instant qualification for this award can be obtained provided a station can show proof of contact with one ASCCRC member operating portable from Ayers Rock, OR alternatively, you can contact one ASCCRC member in Alice Springs if you are operating portable at Ayers Rock.
9. The award is available on behalf of the Northern Territory Tourist Bureau.
10. Certificates will be numbered consecutively.
11. Applications for this award should be sent to the same address as for the "John Flynn" award.

The award measures 250 mm x 200 mm and features a multicolour print of Ayers Rock with lettering in white on a black background. High quality card has again been used and this award would be an attractive addition to the ham shack wall paper.

Good hunting. ■

President VK8GF

Awarded to Sample for VK5WV

CONTESTS

Wally Watkins VK2DEW
Box 1065, Orange 2800

April:

5/6	POLISH "SP" CW CONTEST
8/9	DX YL TO W/VE YL PHONE CONTEST
15/16	DX YL TO W/VE YL CW CONTEST
19/20	POLISH "SP" SSB CONTEST
26/27	HELVETIA "H-26" CONTEST

May:

24/25	CQ WW WPX CW CONTEST

Results of the 1979 IARU Radiosport championships are to hand and "down under" was at the top of the Phone list; ZL1ADI with 2,015,384 points took out the Phone section as top scorer. In the multi-operator section VK8BG (8NCT, 8NPC and 8NTG) with 2,847,564 points was just nosed out by CK7WJ (N6KT, WA6s DGX and VEF) with 2,870,544 points. Other VKs taking part were 4VU, 6IE, 6NE, 3AEW, 5ARR, 1NBQ, 2ATZ and 2AOI.

There is a lot of interest this year in the CQ WW WPX, especially the CW section on May 24-25. This is a good chance to smarten up your contest CW in readiness for this year's RD CW section. Remember also that if you are interested in hard to get zones or countries then participation in a contest is rewarded by those rare prefixes that are only activated during contests. ■

ALARA

AUSTRALIAN LADIES' AMATEUR RADIO ASSOCIATION

DX-YL TO NORTH AMERICAN YL

Phone: Start Tuesday, 8 April, 1980, at 1800 UTC; end Wednesday, 9 April, 1980, at 1800 UTC.

CW: Start Tuesday, 15 April, 1980, at 1800 UTC; end Wednesday, 16 April, 1980, at 1800 UTC.

Eligibility: All licensed YL operators throughout the world are invited to participate. Contacts with OMs do not count. Net contacts do not count.

Procedure: Call "CQ DX YL".

Operation: All bands may be used. Crossband operation may not be used. Stations may be worked and counted once on each band and mode. (Bands: 10 through 160 only.)

Exchange: QSO number, RST reports, country or State. Entries in logs must show band worked at time of contact, time, date and transmitting power. Please print or type.

Scoring:

(a) Phone and CW contacts will be scored as separate contests. Please submit separate logs.

(b) DX-YLs, including Hawaii, may contact all North American Continents which include the States and Canadian Provinces. Alaska YLs will be counted as DX, but may not contact the Western Canadian Provinces to include VE5, VE6, VE7 or VE8 as DX. Alaska YLs may contact Hawaii or the States or Eastern Canadian Provinces. Contestants in the North American area may score contacts with DX stations to include Hawaii and Alaska except as noted above. The Western Canadian Provinces VE5 and VE8 may not contact or count Alaska as DX.

(c) A station may be counted once on each band for credit and one (1) point is earned for each station worked once on each band.

(d) Multiply the number of QSOs by the number of States or countries worked.

(e) Contestants running 150 watts input or less on CW, and 300 watts SSB PEP or less on Phone may multiply the results of D by 1.25 (low power multiplier). Your log MUST show the input power you are running.

Logs: Copies of all Phone and CW logs showing claimed scores and signed by the operator must be postmarked no later than 3 May, 1980, and received by the current YLRL Vice-President no later than 17 May, 1980, to qualify.

Please remember to file separate logs for each portion of the contest (Phone or CW). Contestants claiming 100 points or more MUST SEND DUPE SHEET with log. Send logs and dupe sheets with log.

Awards: Trophy to 1st place DX Phone; Trophy to 1st place NA Phone. Trophy to 1st place DX CW; Trophy to 1st place NA CW. Plaque to highest combined DX score; Plaque to highest NA combined score. 2nd and 3rd place DX and NA winners will receive certificates.

No logs will be returned. Your log must be legible. Be sure your logs contain all the necessary information for the Vice-President to count your scores.

—From YL Harmonics, July-August, No. 4, page 8 (USA). ■

NEWS FROM VK YL

The ALARA award has been published and the rules are forthcoming. Heather VK3AZU devoted many hours to designing and hand painting the award which, in our opinion, is quite beautiful.

Congratulations to Mavis VK3KS, who achieved second place in the YL Anniversary Contest, CW section; Maggie VK3NQQ, who came through for second place in Australia in the same contest; Pamela VK3WP for building a 35 ft. steel cruising ketch which hopefully will have radio equipment aboard; Daurel VK3ANL for completing her first home-brew rig, which is a CW transmitter with 5 watts output.

NETS

YL nets are growing more popular. Contacts on all but the ALARA net can count toward the ALARA award.

Open House Net: Tuesdays and Thursdays, 1030-1300Z, 14.332 QRM.

ALARA Net: Mondays, 0930Z, 3.562 QRM. Net controller Geraldine VK2NQI.

YL Activity Day: 6th day of every month, every hour on the hour, call CQ YL if no YLs are heard, 14.288, 21.188, 21.388, 28.588, 28.688.

Mavis VK3KS says that in February on 14.288, YLs from quite a few countries were heard, including VE, LZ, DL, G, GW and VK.

If you are interested in joining ALARA, please write to the Secretary, Box 110, Blackburn, Victoria 3130. Meetings in the Victorian Division are held every six weeks in the homes of ALARA members.

Maggie VK3NQQ. ■

QSP

The Standard Association of Australia has recently published a report on the "Effect of electricity on the human body". The report, numbered MP30, is available from the office of the Association in all State capitals for $2.10 post paid. ■

4U1ITU

On 27th September last the President of the Deutscher ARC, Philipp Lessig D3LP, presented several items of equipment to the IARC in Geneva. The items consisted of a tower with a Fritzel 3 el yagi for 14, 21, and 28, a RTTY convertor and a special amateur radio globe. The gifts were accepted on behalf of IARC by the President, Heinz Robig HB9QC.—IARU R2 News December 1979. ■

MAGPUBS

• *A Service to Members*

☆

- Books and other items are *normally* available direct from your Division or write to Magpubs, Box 150, Toorak, Victoria 3142. Always add extra for postage.
- Here is a small selection:—

	$	Wt(g)
1980 ARRL Handbook	12.00	1000
RSGB H'book, Vol. 1	16.95	1200
RSBG H'book, Vol 2	14.50	920
Understanding AR	5.70	420
NZ Basic Training Manual	3.30	250
Course in Radio Fundamentals	4.70	260
Int. DX Call Book 1980	15.20	1100
Int. US Call Book 1980	16.10	1300
RSGB VHF/UHF Man.	11.95	1020
Prefix World Map	1.50	100
Solid State Basics	5.70	350
Hints and Kinks	4.40	200
AR Techniques	6.75	520
Beam Antenna H'book	4.55	270
SSB for RA	4.95	380
RFI	3.70	150
FM and Repeaters	4.95	330
Test Equip. for RA ..	7.55	520
RA Data Book	5.20	400
TVI Manual	3.50	300
WIA Stickers	0.20	—
WIA Badges	2.00	—
WIA Call Book	2.45	250
WIA Log Book	2.50	220

and many more normally in stock — ask for list.

- Ask your Division or write to —

MAGPUBS —

P.O. BOX 150, TOORAK, VIC. 3142

IF YOU'RE NOT BUYING AMATEUR RADIO ACTION

(IT'S AUSTRALIA'S BEST SELLING AMATEUR MAGAZINE)

THEN YOU'RE NOT KEEPING UP WITH THE LATEST NEWS, VIEWS AND REVIEWS

Please put me down for 12 editions of Amateur Radio Action, starting NOW!

Rates In Australia - $14.40 Surface mail overseas - $18.40 Air mail: To New Zealand - $A28.70; Malaysia - $A32.60; Japan - $A38.45; USA - $A42.35; UK - $A46.25

Herewith enclosed cheque/postal note/money order to the value of:

$A.....

Name.....

Address.....

.....

.....

Postcode.....

Post to: Amateur Radio Action Subscriptions, Box 628E, Melbourne 3001.

DIVISIONAL NOTES

VK4

At last year's Queensland Division Convention held at the Ipswich Showground many people experienced their first taste of amateur radio. Among the enthusiastic amateurs displaying facets of amateur radio were the happy gang behind the ATV gear (photo 1). Pictured from left are Noel VK4KP, Peter VK4ZWP, Graham VK4ZCL and Geoff VK4AG with home-brew and commercial bits and pieces. Roy O'Malley VK4ZQ (photo 2) took delight in exhibiting another facet of amateur radio — microprocessor systems. Roy's gear is home-brew and very professional. ■

PHOTO 1

PHOTO 2

INTRUDER WATCH

There have been many reports of the Russian "Woodpecker" signals. In the spring of 1977 there was only a single station, apparently located between Kiev and Kharkov in the Ukraine. In early August of 1979 a new radiating source appeared in the Kamchatka area of eastern Siberia, and another on the Black Sea in south-western USSR. The pulse repetition frequency of the "woodpecker" signals transmitter is 10 per second, although there has recently appeared another system using about a 25/second pulse repetition frequency. This has been studied in some detail by VK3XB of the Australian Watch, and by G5XB/GB2IW of the British Watch. Australian observers reported a bearing of 0600 in July, and more recently have submitted reports with bearings for both long and short paths.

In recent months, a number of spurious signals have been reported, one of which appeared on nearly every 10 kHz in the 14 MHz band. UMS, which has outlets to merchant ships, continues to use 7212 kHz and also both A1 and narrow-shift (250 Hz) F1 RTTY on 14,248 kHz. Radio Tirana has been transmitting on several frequencies, settling down on 14,320 kHz at 0400Z and 0500Z, and more recently at 1300Z to 1405Z.

Monitoring systems have been kept busy with all the A9 (or A7) phase-modulated-pulse multi-channel transmissions from the USSR. These sound like a buzz saw and are about 3 kHz wide, with one or possibly two guard carriers at the sides spaced 3.3 kHz apart. One in Northern Egypt on 14,145 kHz has two guard carriers, although all of the Asian and European transmitters appear to have been changed over recently to the use of the single guard carrier.

On occasion one hears a single guard carrier on the low frequency side. This may indicate a spurious signal not intended to be on that frequency. As many as 15 of these systems have been heard at one time on the 14 MHz band, consuming a large part of the band. Some of these obviously are spurious signals from other systems. The pulse contains 12 channels for communication, each channel being about 250 Hz in width. The 14,145 kHz channel in Egypt operates almost 24 hours per day. These systems do not follow the USSR practice of using frequencies which divide by 8 (or, in some cases, by 4).

There are a number of A-1 groups in the 14 MHz band, other than the 14,248 kHz UMS frequency, such as those to and from RJS, a probable Russian navy shore station communicating with ships at sea.

A number of broadcasting harmonics appear in the 14 MHz band, and some of these are accompanied by the harmonics of jammer stations operating on the fundamental frequency of the broadcast station. For example, a jammer operating on 7150 kHz also appears on 14,300 kHz. Highly distorted Mayak programme transmissions from Radio Moscow to various regions appear on 14,040, 14,070 and 14,280 kHz. These are apparently employed for jamming purposes using transmitters with high harmonic output.

Five hundred or 1000 Hz shift F1 RTTY frequently appear on 14,096 kHz, these being common shift frequencies for USSR stations. Two noisy signals about 1 kHz apart often are heard on 14,180 kHz: presumably these are very fast F1 RTTY, possibly from RYD. This station also uses Morse code on occasion.

China transmits both 850 Hz shift RTTY and F1 Morse code in the 15 and 20 metre bands. These include BJZ20 on 21,300 kHz, BCK about 14,067/14,073 kHz, BEA2 about 14,132/14,137 kHz (at times with a 5 kHz shift spurious around 14,300 kHz) and BRN1 about 14,298/14,306 kHz, or one 14,320 kHz. BAA6, BAA7 and BAA8 and BABJ at Peking Airport are heard daily around 0001, 0210 and 0520Z.

HMH25, Korean Central News Agency, Pyongyang, assigned 14,350 kHz, is often heard around 14,348-14,349 kHz sending RYRY tape at 1252Z to 1407Z.

The intruder picture does change, seasonally and otherwise. But this review of the highlights will be of interest to many users of the bands which are open to USSR and China.

K6KA.

From IARU R2 News, December 1979. ■

COMING EVENTS

22 APRIL

VK5 Annual General Meeting. Burley Griffin Building, W. Thebarton Road, Thebarton, 20.00h. ■

BUYING OR SELLING GEAR?

HAMADS

MAKE IT HAPPEN FAST

VK-ZL CONTEST 1979: RESULTS

8 HOUR SECTIONS — CW

Call	10	15	20	40	80	Total
~~VK3BQA~~ VK6AJ	—	—	~~29028~~	—	—	~~29028~~
VK3RJ	11700	—	—	—	—	11700
VK3PL	—	—	6984	—	—	6984
VK3AMD	744	483	1904	—	—	3131
VK~~3YF~~ 4SF	8208	—	—	—	—	8208
VK~~3AA~~ AJ	11088	—	14507	—	—	25595
PHONE						
VK1LF	30	—	256	—	—	286
VK2NZL	—	10199	—	—	—	10199
VK2BQS	3150	1311	1110	—	—	5392
VK2BIP	—	4692	446	—	—	5132
VK3BQA	—	29028	—	—	—	29028
VK3AFW	546	1485	—	—	—	2031
VK3NKN	1792	—	—	—	—	1792
VK3NEA	340	546	—	—	—	886
VK3AIE	120	224	340	—	—	684
VK3NIH	468	—	—	—	—	468
VK5RX	—	—	23005	—	—	23005
VK5RK	—	—	360	—	—	360
VK5NLC	4	208	—	—	—	212
VK7NFR	—	360	—	—	—	360
VK9XW	15876	21392	418	—	—	37686
ZL1BCG	—	—	165044	—	—	165044

24 HOUR SECTION — PHONE

Call	10	15	20	40	80	Total
VK1FT	17088	17407	9	—	—	52546
VK2XT	—	204022	—	—	—	204022
VK2APK	40698	35784	—	—	—	178119
VK2NDK	92713	73500	—	—	—	166213
VK2NVC	—	54426	—	—	—	54426
VK2VRW	54353	48	—	—	—	54401
VK2VAO	41104	12506	—	—	—	53610
VK2VPG	21976	5355	—	—	—	27331
VK2NXH	—	16716	—	—	—	16716
VK2BAM	2067	80	4189	—	—	6336
VK2VHP	660	4320	—	—	—	4980
VK2ABC	—	—	4930	—	—	4930
VK2VCU	—	2352	—	—	—	2352
VK2VKP	120	196	—	—	—	316
VK3ABH	1666	44380	149820	—	—	195866
VK3XB	18423	45752	126363	—	40538 ~~[illegible]~~	
VK3BRM	109484	19594	30888	—	9	159975
VK3ANA	—	—	51997	—	—	51997
VK3SM	—	14304	6825	—	—	21129
VK3VF	900	896	306	—	—	2102
VK3YF	—	—	399	—	—	399
VK4QK	29252	12870	42245	—	—	84367
VK4LT	32248	19844	23052	—	—	75144
VK4SF	64326	—	—	—	—	64326
VK4VU	180	11097	49770	—	—	61047
VK4UR	23144	759	25651	—	—	49554
VK4NFJ	16800	11890	—	—	—	28690
VK4PJ	—	88	5885	—	—	5974
VK5MS	165088	144882	265408	—	—	575778
VK5ABW	3402	15128	7038	—	—	161968
VK5OU	2030	5100	72625	—	—	79755
VK6NBU	96768	93101	—	—	—	189869
VK6NAT	120960	—	—	—	—	120960
VK6FS	3819	6500	31734	—	—	42053
VK6NEN	32686	—	—	—	—	32686
VK6NAG	—	1040	—	—	—	1040
VK7BC	4601	41182	148060	—	—	193843
VK7NFB	—	360	—	—	—	360
ZL1ADI	163831	2832	555138	—	—	721798
ZL1BQD	119808	298452	187592	—	—	605852
ZL1ANH	—	—	398469	—	—	398469
ZL1AKY	90288	—	—	—	—	90288
ZL1BHR	—	—	—	—	170	170

Call	10	15	20	40	80	
ZL2AH	28710	127000	98512	—	—	254222
ZL2ACP	3015	11169	10248	—	—	217194
ZL2BGJ	—	—	—	713	—	713
ZL2ADP	—	4	240	—	—	244
ZL4MG	588	621	32718	—	—	33931
24 HOUR SECTION — CW						
VK1FT	13800	1564	1794	42	—	17200
VK2APK	40415	37674	48900	—	—	126989
VK2AQF	9443	16376	28448	—	—	54267
VK3XB	9248	49742	64848	—	—	123839
VK3AEW	1376	18300	28440	—	—	48116
VK3VF	3266	25585	1610	—	—	30461
VK3AZW	357	2432	3692	—	—	6481
VK3AMD	744	483	1904	—	—	3131
VK3YF	—	—	1365	—	—	1365
VK3SV	—	—	—	—	20	20
VK4XA	56316	64740	40469	—	—	162097
VK4UR	8288	—	638	—	—	8926
VK4SF	8208	—	—	—	—	8208
VK5KO	18540	—	—	—	—	18540
VK5OR	42	1872	10112	16	1	12043
VK5RX	—	—	9906	—	—	9906
VK5QQ	2660	—	35880	—	—	35880
VK5NLC	100	132	—	—	—	232
VK6HD	—	—	—	—	396	396
VK7BC	7344	378	32004	—	—	39720
VK7ZZ	2298	5858	648	—	—	8804
VK7RY	16	3213	2028	—	3	5261
VK7MC	—	—	—	—	551	551
ZL1ADI	78069	8262	244335	—	—	330666
ZL1AXB	—	—	125967	—	—	125967
ZL1AMO	—	—	—	55692	—	55692
ZL1AFW	16789	4674	2436	—	—	23899
ZL1HV	4860	5056	12584	210	24	22734
ZL2BR	81748	—	85540	—	—	167288
ZL2AGY	—	100744	—	—	—	100744
ZL2TX	2380	1092	24640	1015	—	29127
ZL2KR	—	—	110495	—	—	110495
ZL4MG	1230	—	2790	—	—	4020

TOP BAND SCORERS

8 HOUR SECTION — CW

Call	10	15	20	40	80
VK3RJ	11700				
VK3AMD		483			
VK3BQA			29028		
PHONE					
VK9XW	15876				
VK3BQA		29028			
VK5RX			23005		
ZL1~~BCG~~ BCG			165044		

24 HOUR SECTION — CW

Call	10	15	20	40	80
VK4XA	56316	64740			
VK3XB			64848		
VK1FT				42	
VK7MC					551
ZL1ADI	~~78069~~		244335		
ZL2AGY		100744			
ZL1AMO				55692	
ZL1HV					24
~~ZL2~~ ZL2-BR	81748				
PHONE					
~~VK3XB~~	~~VK3BQA~~				9
VK2XT		204022			
VK5MS	165088		265408		
ZL1ADI	163831		555135		
ZL1BQD		298452			
ZL2BGJ				713	
ZL1BHR					170

VK5RX, not a huge entry, but not bad for a 71-year-old operator. VK2VPG, good to see so much overseas interest, had chronometer trouble, has anyone a simple method of identifying dupes? VK3AIE, I prefer the old method of scoring. VK7ZZ scored 8804 on CW, not bad for a totally blind operator (by VK6FS). VK3RJ, hope 8 section is continued. VK3NIH, my first contest. VK4KX, contestants should submit a full log, not just a summary. ZL2AGY, I don't envy you the task of checking all the logs one little bit, but your efforts are certainliy appreciated by those of us involved and I think the amount of activity during the contest is also a good indication of its popularity. VK2VHP, this was the second time I've taken part in the VK/ZL contest, first time was in 1938 as an amateur SWL in YR (now YO).

And that completes another contest; winners will receive their certificates within a short time of the results being published, and I hope to see you all again in 1981. Overseas results will be approximately one month after these.

VK/ZL KONTEST KOMMENTS

My thanks to all those operators who submitted logs for the Contest, and also to the many who gave serial numbers to overseas participators but did not enter a log.

Conditions were not very kind, although some operators managed quite high scores. However, that was the first and last contest that I will accept a summary sheet only, instead of logs. The logs were all checked and the overall picture emerged of entrants not removing duplicates or scoring correctly. This was also evident in those logs called up by the Manager from some operators who only submitted summary sheets.

From our checks, about three hundred VK/ZLs gave numbers to overseas operators.

Let's have more from the novice ranks, as their numbers were well down. However, some good scores were entered by "N" calls, and I hope to see more of them in future contests.

For contest most of the work was done by Hugh VK6FS, and my thanks go to him for his efforts. "Six Flying Saucers" made these comments about the logs:—They sign the declaration that the rules have been observed, but it appears in some instances that they haven't even read them. Please impress on contest operators (as per rules) a SEPARATE LOG for EACH BAND IS REQUIRED. One declaration was signed by two log checkers for the operators as being correct, and it was found that the scoring system they used was their own, giving 6 points for JA6, 29 points for P29, 4 points for WA4, and 1 point for PA0 (why not 10?). Very few logs had duplicates removed — in future deduct 10 points for each one not removed. Please don't accept logs that look like a Chinese laundry ticket. One log, even my chemist could not work out the call signs for me, it was so poorly written.

In one high scoring log I checked 50 contacts and found 20 were invalid. What will we do about it?

Some comments from the logs:—

VK2XT — It appears that according to the 1978 results, most have gone away from the multi-band operation because of the rules (ZL organised in 1978), and I guess it will be reflected again because of the altered points scoring this time. To me it is disappointing to find that a contest does not encourage multi-band operation.

ZL1BQD — Perhaps the organisers may give consideration to a different method of scoring to give more incentive to work all bands. At the moment, an operator is penalized by lack of QSOs in trying to pull out, say 10-20 QSOs on 160m.

L30092 — As one who until 1977 had entered almost every one of these contests since 1934, I can only say that to eliminate the Listeners' Section was LOUSY — all the more so because of the fact that no reason has been published for doing so. ■

YOU and DX

Mike Bazley VK6HD

8 James Road, Kalamunda W.A. 6076

A7XE is very active on all bands CW 80 through to 10, on the low end, QSL via DF4NW.

DJ1US/ST3 is also another CW station that is active on all bands 80 through 10 and often found on 40 metres from 1600Z to 2300Z. QSL via DF2RG.

3B6CD is often QRV from 1400Z on 7015 kHz.

3C1AB, 3C1JP, 3C1NE and 3C1NM are constructing a TV station in Bata and will be there for about nother year. QSL via EA1QF. Active on all bands using SSB.

N4HX/TT8 skeds ON5NT every Sunday on 21240 kHz at 0930Z. A call to ON5NT 5 minutes before sked time can result in a QSO with the TT8.

If you worked PP0MAG recently he was operating from Trinidad. QSL via PY1MAG.

Finally, rumour has it that XZ0ONU will be active from mid-April.

Thanks to those who have supported this column in the past. 73 es DX to all, Mike VK6HD.

Will you miss this column? This has been the last column by Mike Bazley VK6HD and readers will join with the production staff of Amateur Radio in thanking Mike for his efforts over the past year. We now would like another writer — any suggestions? ■

JOIN A NEW MEMBER — NOW!

IONOSPHERIC PREDICTIONS

Len Poynter VK3ZGP/NAC

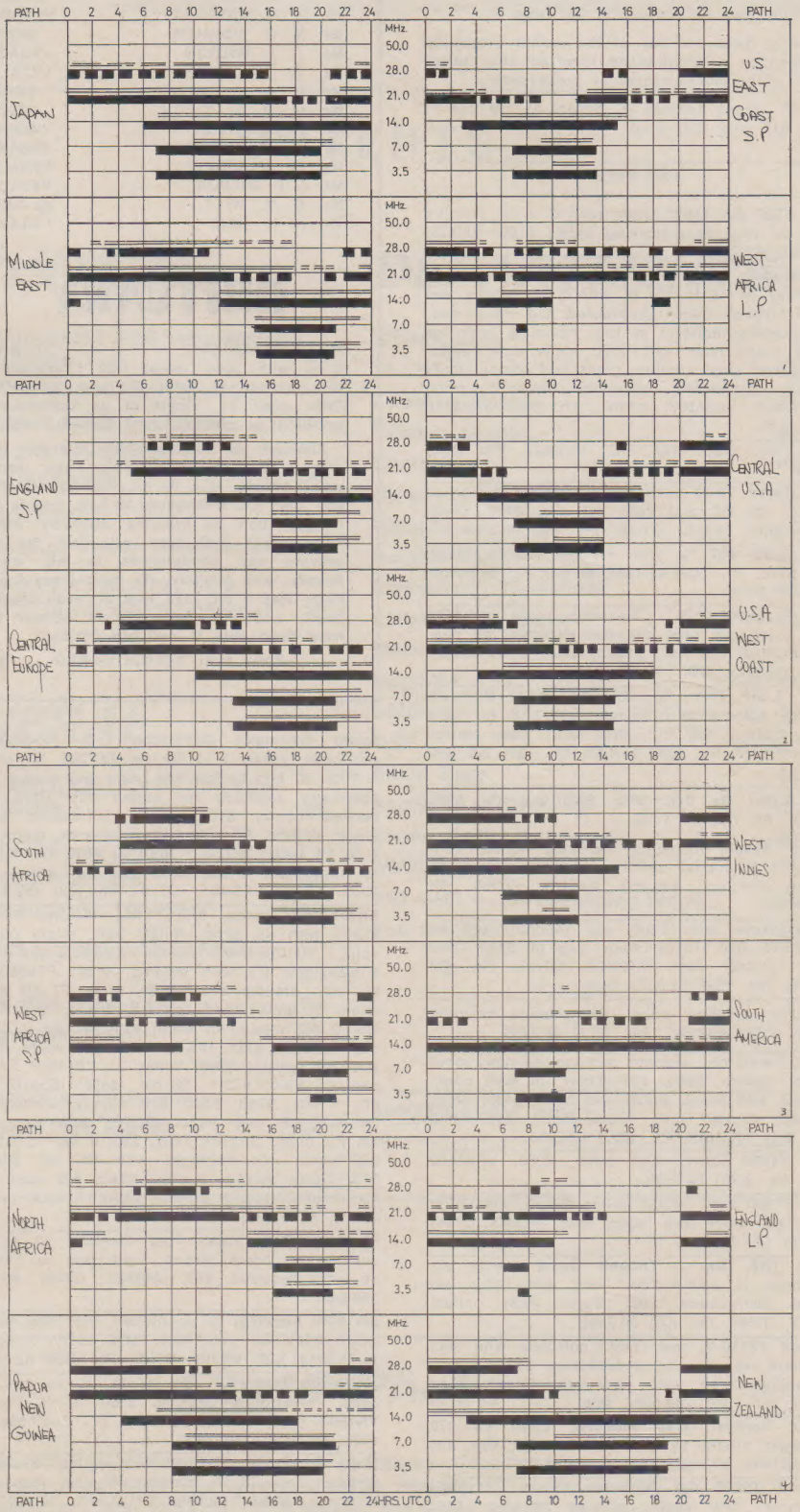

LEGEND

FROM WESTERN AUSTRALIA.

FROM EASTERN AUSTRALIA.

BETTER THAN 50% OF THE MONTH, BUT NOT EVERYDAY.

LESS THAN 50% OF THE MONTH.

PREDICTIONS COURTESY I.P.S. SYDNEY. ALL TIMES UNIVERSAL UTC (GMT).

HAMADS

- Eight lines free to all WIA members. $9 per 3 cm for non-members.
- Copy in typescript please or in block letters to P.O. Box 150, Toorak, Vic. 3142.
- Repeats may be charged at full rates.
- Closing date: 1st day of the month preceding publication. Cancellations received after about 12th of the month cannot be processed.
- QTHR means address is correct as set out in the WIA 1979 Call Book.

FOR SALE

Yaesu FT2F 2m Txcvr, xtals rep. 2, 4, 8, simplex 40, 50, in very good working order, $100. VK3SS. Ph. (051) 47 2265.

Free Standing Radio Tower, triangular 4 ft. base, 2 sections to 47 ft., 60 ft. with 2 in. tubing, top section hinges down, rust-proofed and galvanised, small working platform at top, complete with top bearing thrust race, ART 3000 heavy duty rotator and 150 feet rotator cable, plans and computations supplied, dismantled ready for transport; price $500. David VK3ADM, QTHR. Ph. (03) 592 2168 after 5 p.m.

FT75B, AC, DC, VFO, GC. VK3NXI. Ph. (059) 62 5236.

Drake Txcvr TR4C with noise blanker fitted, as well as 12V DC and 240V AC p/s, $650, ONO. Alf Chandler VK3LC, QTHR. Ph. (03) 99 5344.

Yaesu FLDX 400 Tx, with FR DX 400 Rx, $450. W. H. Cure. Ph. (002) 44 1268, or Box 42, Bellerine, Tasmania 7018.

TI59 Programmable Calculator with PC100A printer, standard plus advance manuals, as new, $385. VK2BHE. Ph. (066) 21 2211 Bus., (066) 24 1447 AH, or PO Box 570, Lismore 2480.

Galaxy 3 HF Tcvr, 80, 40, 20m, 300W PEP I/p SSB/CW, automatically selects USB/LSB for band in use, Galaxy PSU to match, $215. Dave Morrell VK5NDM/ZOW. Ph. (08) 44 4226 AH, (08) 225 6647 Bus.

Drake SSR-1 Rx, 0-30 MHz, SSB and AM, $200. VK2AAB. Ph. (02) 487 1428.

Amateur Shack, including 5-roomed house, complete with functional aerial sytsems and extensive earthing complex, $29,950. VK5HR, QTHR. Ph. (08) 31 2181.

TS520S Txcvr, with DG-5 dig. readout, sell for $700, ONO; also TH3JR triband yagi for $120, ONO. Please contact Jack VK2NTK, QTHR. Ph. (02) 344 7436 AH, (02) 31 3273 Bus.

IC-22S, in excellent cond., with mobile mounting bracket, $200. VK4ZRL. Ph. (071) 28 2785.

FT101Z Txcvr, dig. readout and fan, as new, modified for Novice, $800; FT7 Txcvr, in mint cond., NB mod. with yaesu whips and base, $400; SP820 Kenwood speaker with filters, $50; Dick Smith keyer, $40. VK5NAR. Ph. (087) 62 2034.

Yaesu FT620 Txcvr, mint cond., $350. VK4AMQ, QTHR. Ph. (075) 31 7923.

Yaesu FT200 with FP200 power supply, instruction manual and spare final tubes, $325. VK3MX, QTHR. Ph. (03) 557 2260.

Hygain TH3, Mk. 3 Triband Beam, partly disassembled, in sound cond. and with balun and original instructions, $95. Buyer must collect. VK3AEP QTHR. Ph. (03) 90 2568.

Kenwood TS120-V, new cond., complete with mic., instruction manual and accessories, $500. Sydney metropolitan area sale preferred. Ross Treloar VK2BPZ. Ph. (02) 239 5267 Bus.

Hidarka Vertical Trap Antenna, 10-80 m, $70; lightweight rotator by Crown, 1 month's use, $60. Rob Williams VK3VOS. Ph. (03) 439 9632.

Kenwood TS600 6m All-mode Txcvr, incl. VOX attachment, new cond., original packing, $550. VK3KK, QTHR. Ph. (03) 469 4200 after 6 p.m.

Standard C-6500 HF Wadley Loop Comm. Rx, 0.5-30 MHz, three different power sources, 12 months old, very good cond., $290. Les L31187, QTHR. Ph. (03) 277 1874.

SILENT KEYS

It is with deep regret that we record the passing of —

Mr. D. R. GARRATT	VK3BDG
Mr. E. C. HOWARD	VK2XX
Mr. J. T. WILSON	VK3ACV
Mr. D. McKENZIE	VK3ALQ
Mr. R. S. J. SMITH	VK1JS
Mr. G. R. S. SMITH	VK1ED
Mr. P. GARRISON	VK4NHT
Mr. K. F. PETERS	VK3AKP
Mr. D. McKENZIE	VK3ALQ
Mr. J. T. WILSON	VK3ACV
Mr. W. K. WITT	ex XKW
Mr. A. H. REID	VK3AHR

OBITUARY

Mr. P. GARRISON VK4NHT

It is with deep regret that I announce the passing of Peter Garrison VK4NHT/ZCN, aged 32, victim of an unfortunate accident on Sunday, 20th January, 1980.

Although an amateur radio operator for only a short period of time, Peter made many friends, due to his friendly attitude and from his willingness to help people in things, such as erecting antennas, etc., and I feel that they will join me in offering our condolences to his wife, Brenda, and families, for their great loss. Peter was a big man with an even bigger heart, and I consider it an honour to have been able to call him "friend".

Ernie Hatt VK4ACX/ex-NKQ. ■

Audio Frequency Generator, Trio AG-202A CR oscillator, range X 1 20 Hz to 200 Hz through X 1000 20 kHz to 200 kHz, sine and square wave, attenuator provides for output 10V RMS to 0, perfect cond., $100, ONO; Ultrasonic burglar alarm, Philips, AC with battery reserve, alarm delay 1 to 15 secs., output 1 watt at 2000 Hz, facilities for transducer strips, ideal for ham shack, $100, ONO. Trevor VK3NNR, QTHR. Ph. (03) 459 3845.

FR101, all bands, filter, etc., 160-2m, matching FL101 with sp. proc., $1000 pair, might consider split; YO101 late model monitorscope, $200; FTV250 2m t/v with preamp, $150; FTV650B 6m t/v with preamp and 6883B, $150; FT-201 80-10m trcvr, 2 units fitted with 3 filters, $400 each; BS-6D AC version of MR6A with Ch. 40, 4, 5, 6, 7 and 8, $75; Alda 103 mobile, 100 watts, 80, 40 and 20, compl., $300; Lunar 2m 10/150P PA with preamp, $300; IC211, 12 mo., $550; IC551D, 100W 6m, 3 mo., $750; PS20, 20A supply, 3 mo., $125; 2m s/s HB amp with MRF345, 90W o/p, $100; 2m PA board 2N6084, 60W, $20; 3 6A AC/DC p/s, $20 each; p/s hardware with 40V AC 20A t/f, $75; Osker blocks, 2 only, used, $35 each; Ring for other bits and pieces. Steve Gregory VK3OT, QTHR. Ph. (055) 72 3333.

14 AVQ Wide Band Trap Vertical, 10 to 40m, suitable for home station, field days or camping, no guys required, $95. VK3ASL, QTHR. Ph. (03) 598 9467.

2m 40W Amplifier (6 up model), $25; nine element qualitronics 2m yagi, $20; MR3 tscrv, needs rejuvenating, $20. VK3IG, QTHR. Ph. (058) 52 1636.

IC215 2m Txcvr, Ch. 42, 44, 48, 50, as new, little used, in original packing, $150. J. N. Thornton VK4AJT (ex VK4ZJT), 38 John St., Scarness, Qld. 4656. Ph. (071) 28 1685.

Multi 7 Mobile 10W/1W accessories, socket repeaters 2, 4, 6, 8, simplex 40, 50, exc. cond., with mic., $180. VK3BBM, QTHR. Ph. (03) 232 7084.

Two Only New Shugart SA-400 minifloppy disk drives with cables, connectors and manual, $390 each, ONO. VK3ZMV, QTHR. Ph. (03) 435 0130.

Yaesu Linear FL2000, v.g.c., $325. VK3BCY. Ph. (03) 438 3369.

Kenwood TV 506 6m Transverter, suit 520 and TS520S series, mint cond., $175, includes three element beam free. VK2CI, QTHR. Ph. (049) 66 2231.

Daiwa RF550 Deluxe, filter type speech processor, AC/DC operation, meter, superb performance, 10 dB lift in signal, as new in carton, $135, ONO; Kenwood KP202 hand-held 2m FM txcvr, xtals for repeaters 2, 4, 6 and 8 and simplex 40 and 50, complete with nicad batteries, charger, leather case, "rubber ducky" antenna, manual and orig. carton, excellent cond., $160, ONO. VK3ARZ, QTHR, or Ph. VK3OM (03) 560 9215.

Collins 75S-3, 32S-1 and speaker/power supply, $950; Collins 75A4 receiver with 3 mechanical filters, $385. VK1VP, QTHR. Ph. (062) 48 5882 AH.

FT200, plus matching PSU and external speaker, also fan for finals, v.g.c., $350, ONO. VK3BHL, QTHR. Ph. (03) 557 4465.

FR101D, complete with all options and all frequencies possible, mint cond., $800, will take smaller Rx as part payment; FT-221 all mode 2m unit, mint cond., $500; FT-75B, plus YC-7B remote digital display, $550. VK4UX, QTHR. Ph. (074) 62 2596.

Drake Txcvr TR4C with noise blanker fitted and 12V DC/240V AC PS, $650, ONO. VK3LC, QTHR. Ph. (03) 99 5344.

Realistic DX-160 Com. Rx, SO-239 coax. socket fitted, $125; sideband SE-502 23 channel 10m Txcvr, 12W, $100; both with manuals and in orig. packing; will sell separately. Ross VK4NXB, 51 Spicer Street, Laidley. Ph. (075) 65 1445 after 6 p.m.

A-TRONIX Code Reader, alpha-numerical display, 7 to 40 w.p.m., 12V or 240V AC, just the unit to upgrade your CW, no further use. full instructions and circuit diagram, $125 posted. VK4NMJ, QTHR.

WANTED

Kenwood T599D Transmitter. Price and particulars to VK4NMJ, QTHR.

Someone to come and rid a Model 15 Teleprinter of various problems, will pay for travelling and time spent. T. Robinson L31105, Lot 92, Russell Avenue, Woodend, Vic. 3442.

Donation of a quantity of high band VHF radios, mobile or base, if you can help please send any sets or even parts to Broadford Railway Station, Victoria 3658 or Ph. (057) 84 1558, VK3NTU (for most worthy cause), QTHR.

Swan 240 Tri Band Transceiver with or without PS. VK2QC, QTHR. Ph. (044) 76 7927.

Kenwood KP202 2m FM, hand-held, c/w nicad batteries and charging base. Please contact VK2NTY/YOC, QTHR. Ph. (080) 5285.

General Coverage Rx, working, for young lad showing interest in ham radio, looking for something at the low end of the price range. Laurie VK2AQW. Ph. (02) 436 2766 Bus., (02) 358 3995 AH.

TRADE HAMADS

High-Gain Beams for 40, 20, 15, 10, 6, 2 and 70 cm, also UHF CB and ATV repeaters, DSI frequency counters and kits, Mirage PWR/SWR meters, also 2m amps with preamp., 10W in 80W out, amp. with Rx preamp., suit 50-54 MHz. Write ATN Antennas, Box 80, Birchip 3483, for catalogue.

ADVERTISERS' INDEX

AMATEUR RADIO ACTION	43
BAIL ELECTRONICS	2
CHIRNSIDE ELECTRONICS	OBC
CW ELECTRONICS	24, 25
DICK SMITH ELECTRONICS	27
SIDEBAND ELECTRONIC ENGINEERING	37
SCALAR INDUSTRIES	7
VICOM	9, 14, 15, 23, 47
WILLIAM WILLIS & CO. PTY. LTD.	27

WHY ICOM HAS THE 2 METRE MARKET SEWN - UP . . . . . .

6 Great Rigs of the highest quality!

"THE FAMOUS IC22S"

Over 3000 of these popular am fm mobile rigs in use in Australia. Uses a programmable divide matrix giving 22 channels. Comes complete with mic, mobile mounting bracket, dc leads and VICOM 90 day warranty. LIST PRICE $299.

"IC260A SSB/FM/CW MOBILE"

This new mobile all-mode rig covers 144-148 MHz. Features uP control, multi-purpose scanning twin VFO's, efficient noise blanker, CW break-in and many other circuits for your convenience. The IC260A runs 10 watts and offers outstanding performance. Your new IC260A comes complete with mic, mannual, mobile mounting brackets and 90 day warranty. LIST PRICE $599.

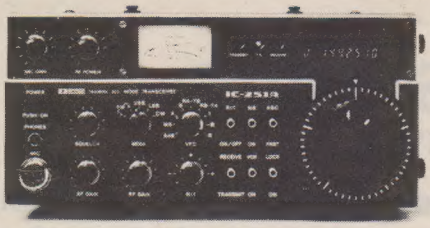

"IC251A all-mode base station/mobile"

The popular ac/dc Microprocessor-controlled rig incorporating multi-purpose scanning, dual VFO's light weight and featuring the ICOM outstanding performance. The optical chopper tuning system means no backlash and problem free use as there is no dial gear or variable capacitors. Drop in and see a new IC251A at your VICOM dealer today! LIST PRICE $847.

"IC2A mini hand-held"

ICOM'S newest am rig, about the size of a $2 note! 1.5 watts output using unique slip on/off and selectable size nicad packs. Offers 800 channels 144-148 MHz. The cheapest am hand-held around. ONLY $279

"IC255A 25w FM MOBILE"

The uP controlled fm mobile runs 25 watts output which means greater QSO range. The receiver uses the newly developed low-noise and large dynamic range juction FET's (for the RF amplifier and first mixer) and helical cavity filters providing excellent sensitivity and intermod distortion characteristics. Your new IC255A comes complete with VICOM'S 90 day warranty. OUR PRICE $425.

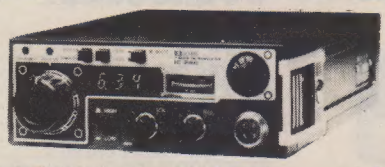

"IC280 Remotable mobile"

The IC280 squeezes optimum performance into the tightest spaces. Using a detachable front section, the diminutive IC280 is designed to fit the most cramped modern vehicle. Small size means big performance with ICOM - your new IC280 remotable comes complete with mic, mobile bracket and comprehensive instruction manual. STILL ONLY $450!

ICOM PERFORMANCE: NOBODY DOES IT BETTER!

VICOM

Distributed in Australia by VICOM

set your sights on this ...

YAESU

The radio.

now presents you the all new

FT-107 SERIES

SOLID STATE HF TRANSCEIVER

The FT-107M is the rig you've been waiting for. The versatility of all solid state construction is teamed with the time-proven design techniques from the FT-901 and FT-101Z transceivers to give you—today's active amateur—the competitive edge under the demanding conditions of the next decade.

MELBOURNE'S LEADING AUTHORIZED YAESU DISTRIBUTOR.

BIG DISCOUNTS ON YAESU NOW!

FT-101Z. 160-10M Transceiver. analog dial.
FT-101ZD. 160-10M Transceiver. Digital.
optional digital display for FT-101Z.
optional Fan.
optional DC-DC converter.
YE-7A Hand mike.
YD-148 Desk mike.
FT-901DM. 160-10M Transceiver.
FV-901. ext. VFO for FT-901 & FT-101Z.
YO-901. Panoramic adapter monitorscope.
FC-901. Antenna coupler.
FTV-901. Converter. 6M,2M,70 cm. all inc.
FTV-901. Converter. 6M,2M.
SP-901. ext. speaker.
FRG-7. Communication receiver.
FRG-7000. Digital communications receiver.
LF-2A Narrow band filter for FRG-7.
FT-7B. 80-10M Transceiver.
FP-12. 12 Amp. power supply for FT-7B.
YC-7B. Digital display for FT-7B.
FT-227RB. 2M Digital programable transceiver.
YP-150. Dummy load/Watt meter.
FF-50DX. Low pass filter. 2kw.
QTR-24D Deluxe 24 hr. World clock.
FT-207R Handheld.
Base charger.
FT-107 NEW HF RANGE.
FT-707 NEW HF TRANSCEIVER RANGE.

YAESU

WRITE OR GIVE US A CALL TODAY!

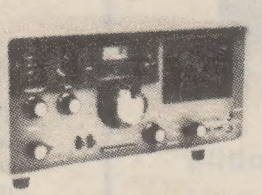

FRG7 Synthesized Receiver.
For amateurs, novices and shortwave listeners. Electronic band changing with 0.5 - 29.9 MHz continuous coverage. Uses Wadley Loop to derive synthesized hetrodyne oscillator signal. LSB, USB, AM and CW. Frequency readout better than 10KHz. stability within 500Hz. Write for full details.

$309.--

bankcard welcome here

We also stock:

ICOM IC22S	$289.
LEADER Ham scope	$309.
LEADER Dip meter	$89.
TONO 7000E Computer	$895.
DIAWA CN620 SWR meter	$95.
DIAWA Ant. Coupler CN217	$155.
AUTO Ant. coupler CN1001	$259.
KENWOOD R-1000 Comunnications Receiver	$489.
TS-120S HF Transceiver	$689.
TL-120 Solid State Linear	$229.
HC-500A Tokyo Hy-Power Labs transmatch 500 W.PEP	$109.
HI-Q Baluns for dipoles, beams etc	$16.
5 Position coax switches	$38.
2 Position coax switches	$16.
plus Morse keys, dummy loads etc.	

EMOTATOR ROTATORS

103LBX. Medium Duty	$169.
502Cxx. Heavy Duty.	$249.
1102MXX. Extra Heavy Duty	$349.
1103MXX. Extra Extra Heavy Duty.	$395.
502 Mast Clamp	$32.
103 Mast Clamp	$20.
VCTF-7. 7 Core Cable per metre	$1.20
VCTF-6. 6 Core Cable per metre	$1.00

CHIRNSIDE ELECTRONICS, 26 Edwards Road, Chirnside Park, Lilydale, 3116. Phone (03) 726 7353